TRAIL FORTRESS

BUILT FOR THE TRAIL. CHECKED FOR YOUR TRUCK.

K&N 69-1213TS Installation Instructions

Metal Intake for Honda Accord (2013-2017)

Part number: 69-1213TS

trailfortress.com/k-n-performance-air-intake-system-69-1213ts

Scan for fitment, price and install help

TYPHOON INTAKE SYSTEMS

INTAKE SYSTEMS FOR VEHICLES LISTED ARE 50 STATE LEGAL. SEE KNFILTERS.COM FOR CARB STATUS ON EACH PART FOR A SPECIFIC VEHICLE.

INSTALLATION INSTRUCTIONS

69-1213TS
HONDA
2013-14 Accord
L4-2.4L

NOTE: Excludes LEV2 SULEV 2013-2014
Test Groups: DHNXV02.4NC3, EHNXV02.46C3

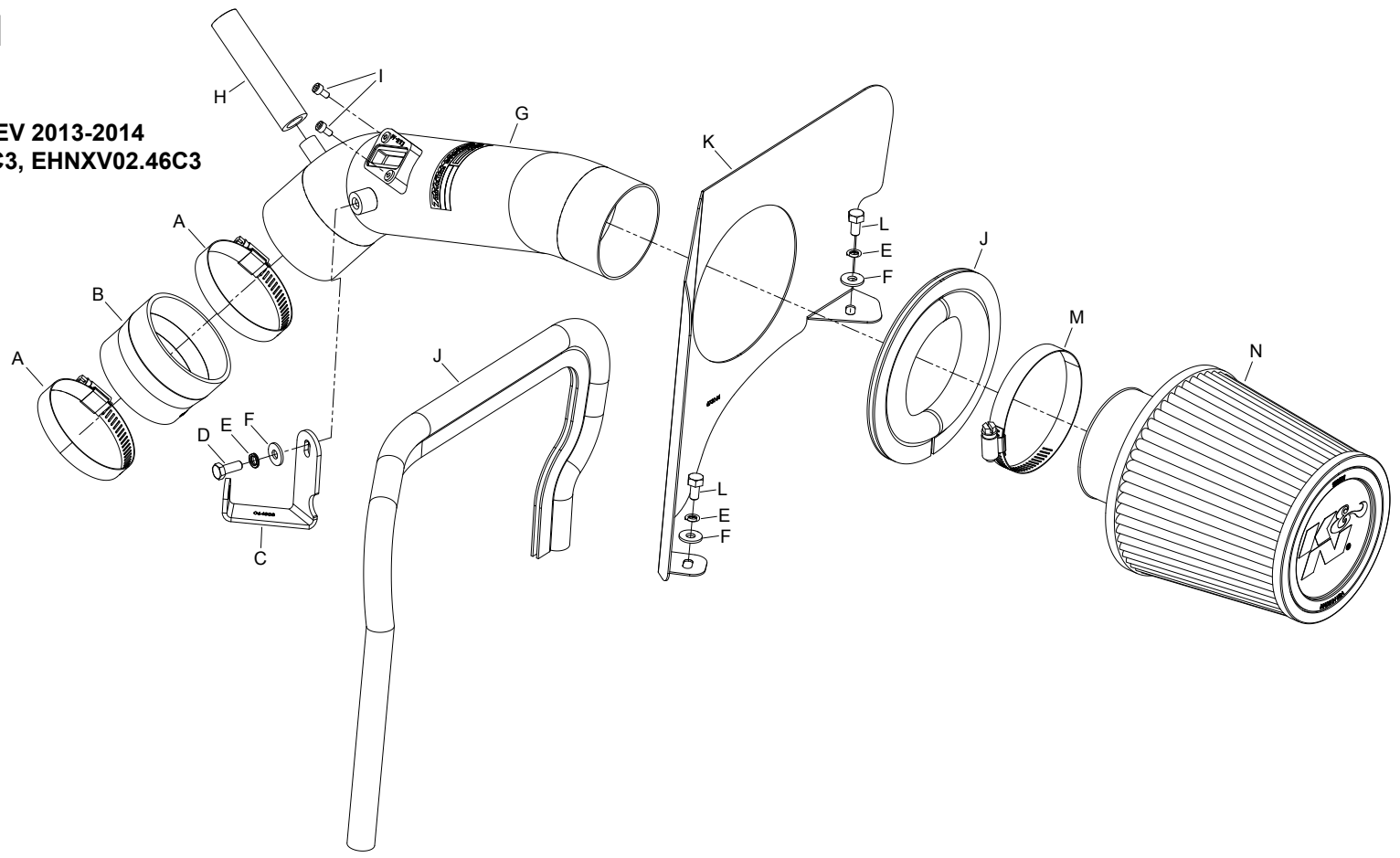

TOOLS NEEDED:

Ratchet
Extension
10mm socket
12mm wrenc
flat blade screw driver,
Pliers
Phillips screw driver
3mm allen key

PARTS LIST:

	Description	Qty.	Part #		Description	Qty.	Part #		Description	Qty.	Part #
A	HOSE CLAMP #40	2	08554	F	WASHER; 6MM FLAT, SS	3	08269	K	HEAT SHIELD	1	073144
B	HOSE; 2-3/4" TO 2-5/8"ID X 2"L	1	084014	G	INTAKE TUBE	1	27344TS	L	BOLT; M6 X 1.00 X 12MM, SS	2	07727
C	BRACKET; "C", 69-1213, STL	1	064308	H	HOSE; 1/2"ID X 3-1/2"L	1	087028	M	HOSE CLAMP #44	1	08577
D	BOLT; 6MM-1.00 X 16MM, SS	1	07812	I	BOLT; M4-0.07 8MM, A/H CAP	2	07733	N	AIR FILTER	1	RU-4960XD
E	WASHER; M6 SPLIT LOCK ZINC	3	1-3025	J	EDGE TRIM (44")	1	102486				

If you need any assistance please call 1-800-858-3333 to speak with a representative in our Customer Service Center before returning the product.

NOTE: FAILURE TO FOLLOW INSTALLATION INSTRUCTIONS AND NOT USING THE PROVIDED HARDWARE MAY DAMAGE THE INTAKE TUBE, THROTTLE BODY AND ENGINE.

TO START:

1. Turn off the ignition and disconnect the negative battery cable.
NOTE: Disconnecting the negative battery cable erases pre-programmed electronic memories. Write down all memory settings before disconnecting the negative battery cable. Some radios will require an anti-theft code to be entered after the battery is reconnected. The anti-theft code is typically supplied with your owner's manual. In the event your vehicles anti-theft code cannot be recovered, contact an authorized dealership to obtain your vehicles anti-theft code.



2. Disconnect the mass air sensor electrical connection and unhook the wiring harness from the air box.



3. Release the spring clamp securing the crank case vent pipe to the factory intake tube and then disconnect the vent pipe from the intake tube.

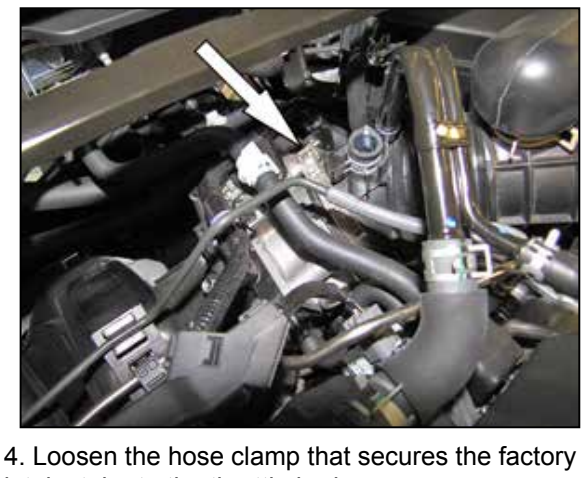

4. Loosen the hose clamp that secures the factory intake tube to the throttle body.



5. Loosen and remove the two bolts securing the factory air box.



6. Remove the complete factory intake system from the vehicle.
NOTE: K&N Engineering, Inc., recommends that customers do not discard factory air intake.