TRAIL FORTRESS

BUILT FOR THE TRAIL. CHECKED FOR YOUR TRUCK.

K&N 69-1212TS Installation Instructions

Metal Intake for Honda Accord & Acura TLX

Part number: 69-1212TS

trailfortress.com/k-n-performance-air-intake-system-69-1212ts

Scan for fitment, price and install help

TYPHOON INTAKE SYSTEMS

INTAKE SYSTEMS FOR VEHICLES LISTED ARE 50 STATE LEGAL. SEE KNFILTERS.COM FOR CARB STATUS ON EACH PART FOR A SPECIFIC VEHICLE.

INSTALLATION INSTRUCTIONS

69-1212TS
HONDA
2013-14 Accord
V6-3.5L

NOTE: Excludes LEV2 SULEV 2013-2014
Test Groups: DHNXV03.5VC3, EHNXV03.5SC3

TOOLS NEEDED:

Ratchet
Extension
12mm socket
10mm socket
8mm socket,
Flat Blade Screw Driver
Phillips Screw Driver
Pliers
3mm allen key
10mm wrench

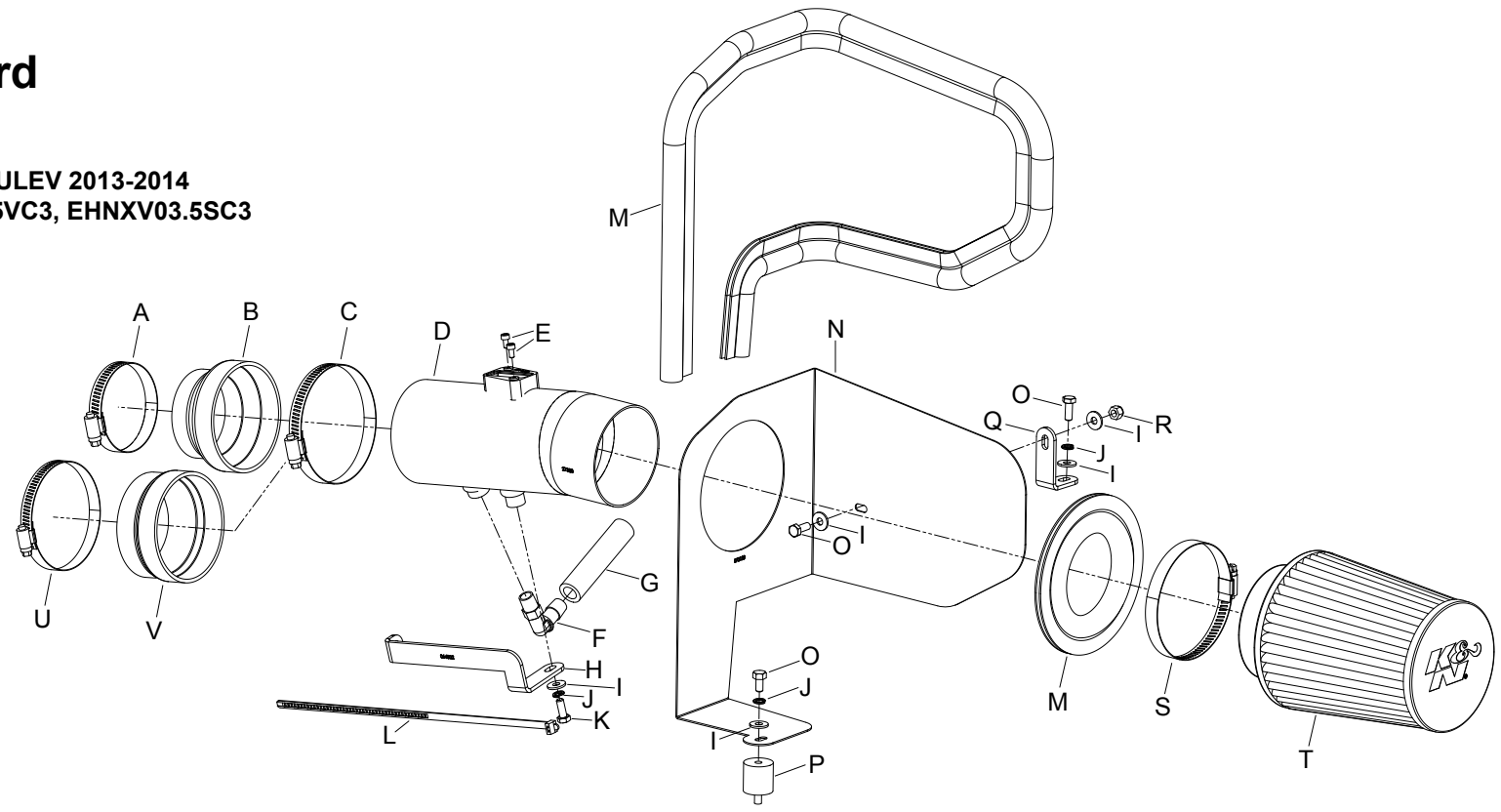

PARTS LIST:

	Description	Qty.	Part #		Description	Qty.	Part #		Description	Qty.	Part #
A	HOSE CLAMP #44	1	08560	H	BRACKET; "L", STL	1	064302	O	BOLT; M6-1 X 16MM	3	07812
B	HOSE; 3.5" TO 2.75" X 2"L	1	084093	I	WASHER; 6MM FLAT	5	08269	P	STUD; RUBBER MOUNT, M6	1	02033
C	HOSE CLAMP #56	1	08620	J	WASHER; M6 SPLIT LOCK ZINC	3	1-3025	Q	BRACKET; SMALL	1	070015A
D	INTAKE TUBE (AL)	1	27330TS	K	BOLT; M6 X 1 X 12MM	1	07727	R	NUT; 6MM NYLOCK, HEXHEAD	1	07512
E	BOLT; M4-.7 X 8MM, A/H	2	07733	L	CABLE TIES; 11" BLACK	1	21590	S	HOSE CLAMP #60	1	08624
F	VENT; 90 DEG, 1/2: HOSE, 1/4"	1	08110FK	M	EDGE TRIM (61")	1	102492A	T	AIR FILTER	1	RU-4630XD
G	HOSE; 1/2" ID X 3.5"L	1	087028	N	HEAT SHIELD	1	073133	U	HOSE CLAMP #52	1	08610
								V	HOSE;3.25"ID TO 3.5"ID X 2.25"	1	084091

If you need any assistance please call 1-800-858-3333 to speak with a representative in our Customer Service Center before returning the product.

NOTE: FAILURE TO FOLLOW INSTALLATION INSTRUCTIONS AND NOT USING THE PROVIDED HARDWARE MAY DAMAGE THE INTAKE TUBE, THROTTLE BODY AND ENGINE.

TO START:

1. Turn off the ignition and disconnect the negative battery cable.
NOTE: Disconnecting the negative battery cable erases pre-programmed electronic memories. Write down all memory settings before disconnecting the negative battery cable. Some radios will require an anti-theft code to be entered after the battery is reconnected. The anti-theft code is typically supplied with your owner's manual. In the event your vehicles' anti-theft code cannot be recovered, contact an authorized dealership to obtain your vehicles anti-theft code.



2. Disconnect the mass air sensor electrical connection and unhook the wiring harness from the air box.



3. Lift off the engine cover.



4. Disconnect the crank case vent tube from the intake hose.



5. Loosen the hose clamp securing the intake hose to the throttle body and unhook the wiring harness from the intake hose.



6. Loosen and remove the two air box mounting bolts.
NOTE: The front mounting bolt is down low between the battery and the air box.

trailfortress.com/k-n-performance-air-intake-system-69-1212ts