K&N 66-3040 Installation Instructions

66-3040

Part number: 66-3040

trailfortress.com/k-n-x-stream-top-assembly-66-3040

Scan for fitment, price and install help

INSTALLATION INSTRUCTIONS
14” X-Stream Custom Assemblies
Part # 66-3000, 66-3010, 66-3020, 66-3030, 66-3040, 66-3050, 66-3060, 66-3070, 66-3080, 66-3090, 66-3100

Congratulations, you have purchased the finest air intake kit that money can buy. The following procedure MUST be followed to ensure proper performance and seal of the K&N® X-Stream® Custom Assembly. Failure to follow any of these steps CAN result in the X-Stream’s top warranty becoming void

If you need any assistance please call 1-800-858-3333 to speak with a representative in our Customer Service Center before returning the product.

CAUTION: It is imperative that no part of the X-Stream® top comes into contact with anything on the vehicle at any time. If the X-Stream® top rubs against anything it might become irreparably damaged. Double check measurements to verify that no interference will occur **BEFORE** closing the hood.

Step 1 Thread the all-thread stud into the carburetor until it bottoms out. Secure with jam nut.
NOTE: If your carburetor has a 5/16” x 18” stud boss, use the provided 5/16 to 1/4” adapter.

Step 2 Install the neoprene gasket and the base plate on carburetor.

Step 3 Install the K&N® air filter making sure it is fully seated in base.

Step 4 Thread one of the nylock nuts onto stud.

Step 5 Place a straight edge across the top of the air filter element. Adjust the nylock until the top of it is 3 turns below the bottom of the straight edge.

Step 6 Remove the stud and cut it 1-1/4” above the nylock. De-burr the end of the stud and make sure the nut threads on smoothly.

Step 7 Re-install the stud making sure the nylock is still 3 turns below the straight edge.

Step 8 Place one of the steel washers on the stud.

Step 9 Install the X-Stream® Air Flow Top making sure it is fully seated on the air filter all the way around.

Step 10 Install rubber washer.

Step 11 Install steel washer.

Step 12 Install nylock nut - It should become tight 1-1/2 to 2 turns after contacting the flat washer.

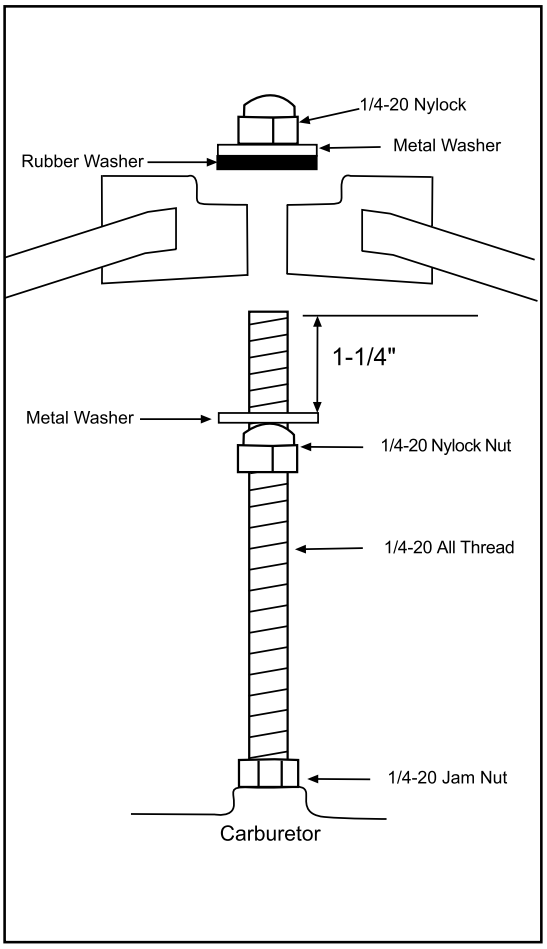

US PATENT Number: D401,597

K&N Engineering, Inc. • P.O. Box 1329 • Riverside, CA 92502 • (909) 826-4000 • (800) 858-3333
http://www.KNFilters.com e-mail: Tech@KNFilters.com

18100B
10/02/17

trailfortress.com/k-n-x-stream-top-assembly-66-3040