TRAIL FORTRESS

BUILT FOR THE TRAIL. CHECKED FOR YOUR TRUCK.

K&N 63-9045 Installation Instructions

Cold Air Intake for Toyota GR Supra & BMW Z4

Part number: 63-9045

trailfortress.com/k-n-performance-air-intake-system-63-9045

Scan for fitment, price and install help

AIRCHARGER® HIGH-FLOW INTAKE SYSTEMS

INSTALLATION INSTRUCTIONS

Not legal for sale or use in California on any pollution controlled motor vehicle.

63-9045
TOYOTA / BMW
2021-24 GR SUPRA
2020-24 Z4
L4-2.0L

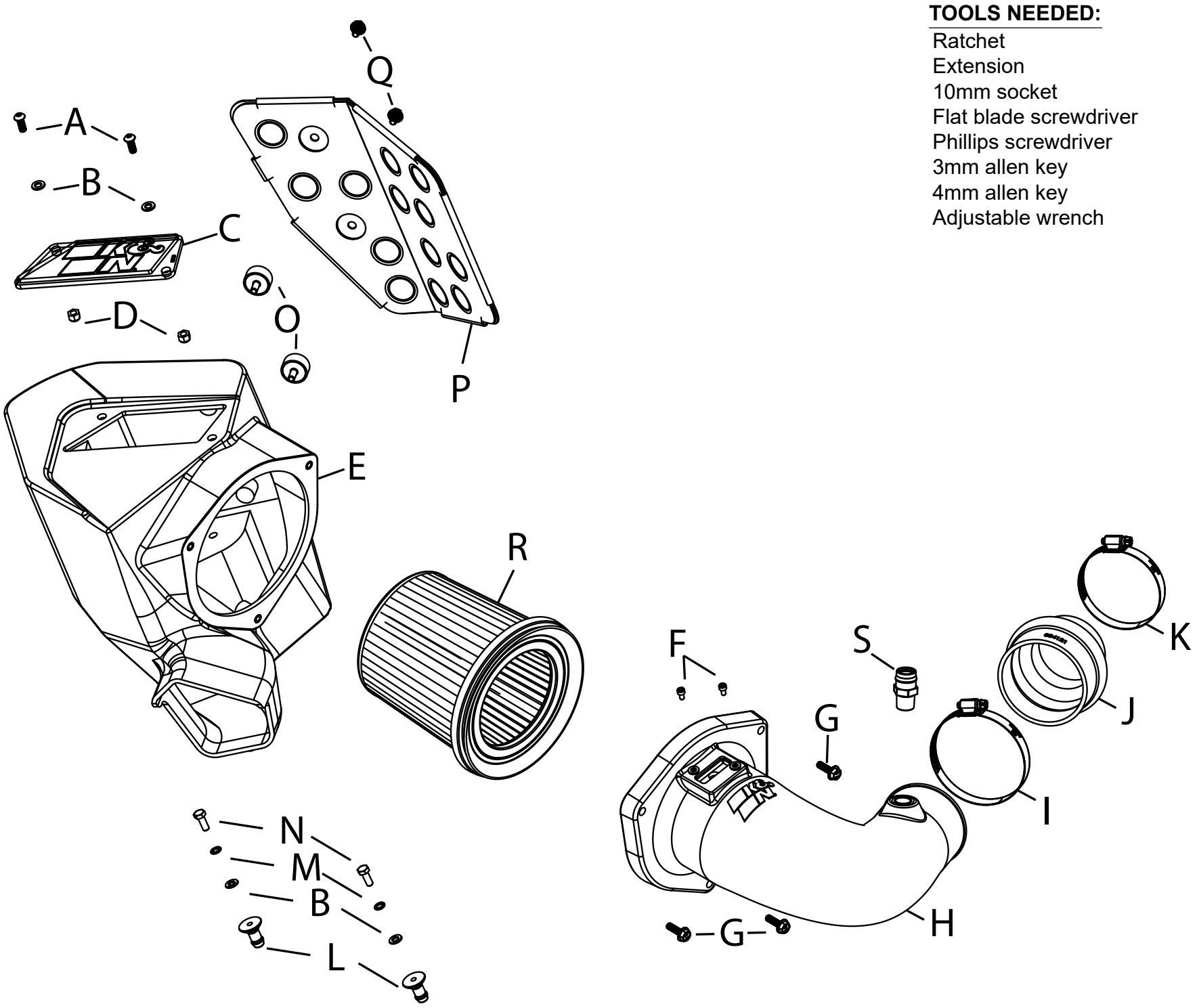

TOOLS NEEDED:

Ratchet
Extension
10mm socket
Flat blade screwdriver
Phillips screwdriver
3mm allen key
4mm allen key
Adjustable wrench

PARTS LIST:

	Description	Qty.	Part #		Description	Qty.	Part #		Description	Qty.	Part #
A	BOLT; M6 X 1 X 16MM, BTNHD	2	07730	H	INTAKE TUBE; (PU)	1	087525-1	O	STUD; RUBBER 1/2”L X 1”W	2	070228
B	WASHER; 6MM FLAT	4	08269	I	HOSE CLAMP; #52	1	08610	P	HEAT SHIELD; ALUM	1	07380
C	PLATE; K&N LOGO, CLEAR	1	08351-1	J	HOSE; HUMP 2.5”ID X 3.25”ID	1	084121	Q	BOLT; M6-1 X 12, HEX/FLANGE	2	1-2110
D	NUT; 6MM NYLOCK, HEXHD	2	07553	K	HOSE CLAMP; #44 STAINLESS	1	08560	R	AIR FILTER	1	RU-5401
E	AIRBOX; (NV)	1	087463A	L	MOUNT; PLASTIC AIRBOX	2	8-186-1	S	FITTING; 3/4”OD X 1.12”L	1	82934
F	BOLT; M4-.7 X 8MM, ALNHD	2	07733	M	WASHER; M6 SPLIT LOCK	2	1-3025				
G	BOLT; M6-1 X 30, HEX/FLANGE	3	1-1016	N	BOLT; M6-1 X 16MM, HEX	2	07812				

If you need any assistance please call 1-800-858-3333 to speak with a representative in our Customer Service Center before returning the product.

NOTE: FAILURE TO FOLLOW INSTALLATION INSTRUCTIONS AND NOT USING THE PROVIDED HARDWARE MAY DAMAGE THE INTAKE TUBE, THROTTLE BODY AND ENGINE.

trailfortress.com/k-n-performance-air-intake-system-63-9045