TRAIL FORTRESS

BUILT FOR THE TRAIL. CHECKED FOR YOUR TRUCK.

K&N 63-8002 Installation Instructions

63-8002

Part number: 63-8002

trailfortress.com/k-n-elevated-intake-kit-snorkel-ford-bronco-2-3l-2-7l-63-8002

Scan for fitment, price and install help

INSTALLATION INSTRUCTIONS

Not legal for sale or use in California on any pollution controlled motor vehicle.

63-8002
FORD
2021-25 Bronco
L4-2.3L / V6-2.7L

NOTE: This kit will not increase the manufacturer suggested water fording limit.

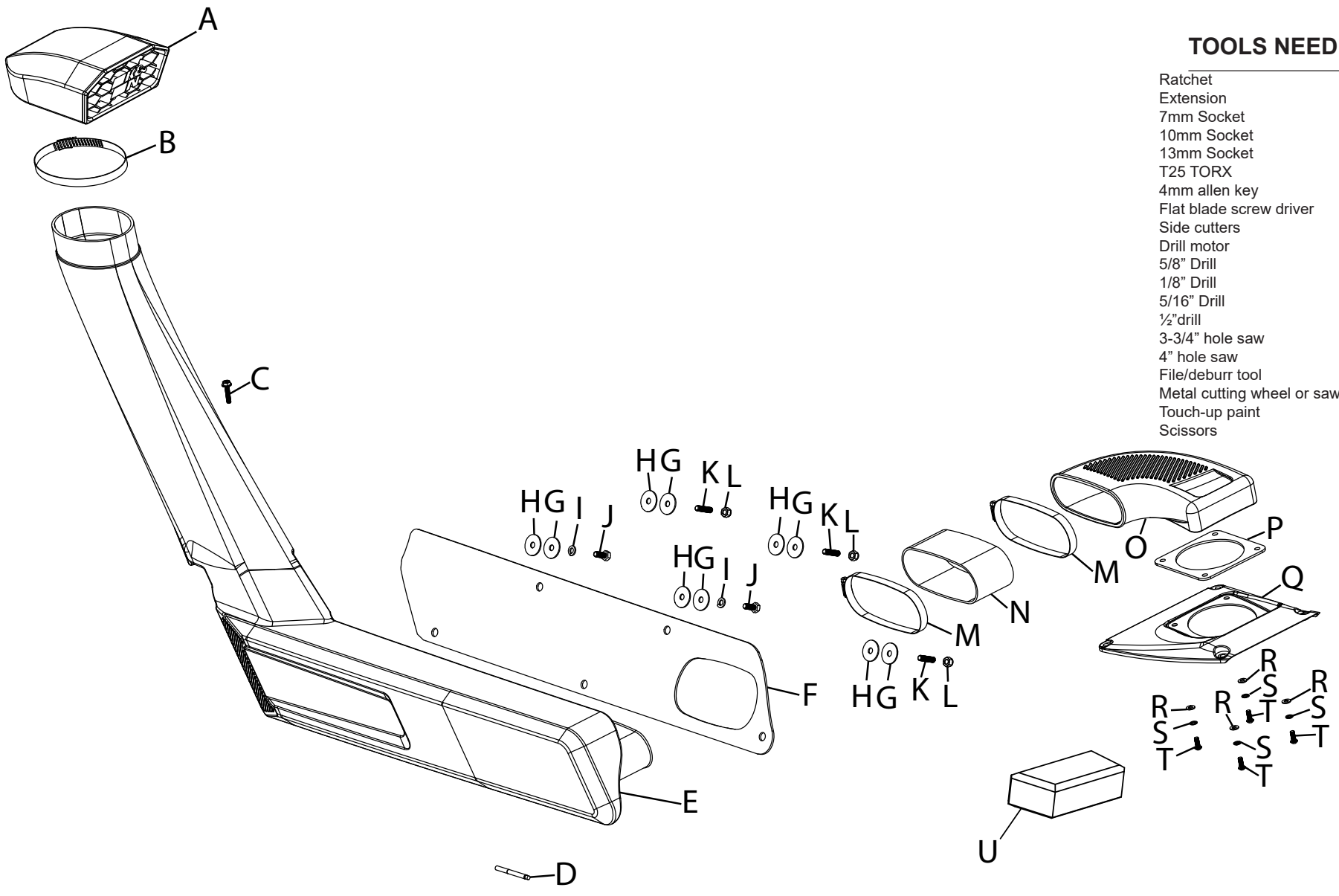

TOOLS NEEDED:

Ratchet
Extension
7mm Socket
10mm Socket
13mm Socket
T25 TORX
4mm allen key
Flat blade screw driver
Side cutters
Drill motor
5/8” Drill
1/8” Drill
5/16” Drill
½”drill
3-3/4” hole saw
4” hole saw
File/deburr tool
Metal cutting wheel or saw.
Touch-up paint
Scissors

PARTS LIST:

	Description	Qty.	Part #		Description	Qty.	Part #		Description	Qty.	Part #
A	SNORKEL TOP; (PH)	1	087601	H	WASHER; 1.25”OD X .30”ID	5	21708	O	DUCT; AIRBOX LID, (QD)	1	087536
B	HOSE CLAMP; #72	1	08671	I	WASHER; M8 SPLIT LOCK	2	1-3036	P	GASKET; ADAPTER TO LID	1	09408
C	BOLT; M6-1 X 30, HEX/FLANGE	1	1-1016	J	BOLT; 8MM-1.25 X 20MM HEX	2	07787	Q	LID; AIRBOX TO SNORKEL	1	088204
D	THREADLOCKER; 2ML MED.	1	482	K	STUD; 8MM, DOUBLE END	3	070225	R	WASHER; 6MM FLAT	4	08269
E	SNORKEL; (QE)	1	087537-1	L	NUT; 8MM NYLOCK	3	07502	S	WASHER; M6 SPLIT LOCK	4	1-3025
F	GASKET; SNORKEL TO FEND	1	09407	M	HOSE CLAMP; #80	2	08694	T	BOLT; M6 X 1 X 16MM, BTNHD	4	07730
G	WASHER; 5/16 X 1.25” FENDER	5	08130	N	HOSE; 2.58”ID W X 6.5”ID OVAL	1	084131	U	INSERT; FOAM	1	971979

If you need any assistance please call 1-800-858-3333 to speak with a representative in our Customer Service Center before returning the product.

NOTE: FAILURE TO FOLLOW INSTALLATION INSTRUCTIONS AND NOT USING THE PROVIDED HARDWARE MAY DAMAGE THE INTAKE TUBE, THROTTLE BODY AND ENGINE.

NOTE: BEFORE PROCEEDING WITH INSTALLATION! Two complete templates are provided with these instruction sheets. One set of templates will be used to check against the provided gasket to double check hole and insert placement. The second template will be used to mark the holes to be drilled into the vehicle’s fender.

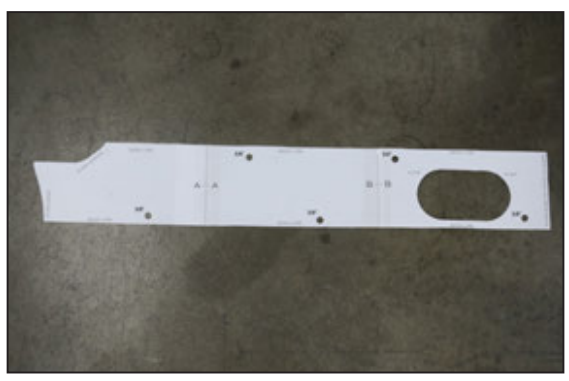

Cut both templates out and tape them together by aligning the A-A and B-B arrows. Cut out all the 5/8”” mounting holes and the 3-3/4” pass through hole on the first template only. Lay the fully cut-out template on top of the other to make sure they align. Next lay the cut-out template onto the fender gasket to make sure all the holes align.



Next lay the cut-out template onto the snorkel to see that the inserts align. Once it has been determined the templates and components are all sized correctly you can proceed. If not, do not install and contact Technical support 800-858-3333.