TRAIL FORTRESS

BUILT FOR THE TRAIL. CHECKED FOR YOUR TRUCK.

K&N 63-6014 Installation Instructions

63 Series Intake for Nissan Frontier, Xterra & Pathfinder

Part number: 63-6014

trailfortress.com/k-n-performance-air-intake-system-63-6014

Scan for fitment, price and install help

AIRCHARGER® HIGH-FLOW INTAKE KITS

NOT LEGAL FOR SALE OR USE ON ANY POLLUTION CONTROLLED MOTOR VEHICLE IN CALIFORNIA OR STATES ADOPTING CALIFORNIA EMISSION PROCEDURES.

See knfilters.com for CARB status on each part for a specific vehicle

INSTALLATION INSTRUCTIONS

63-6014
NISSAN
2008-12 Pathfinder
2008-15 Xterra
2008-19 Frontier
V6-4.0L

NOTE: This kit was not designed to fit vehicles with a body lift.

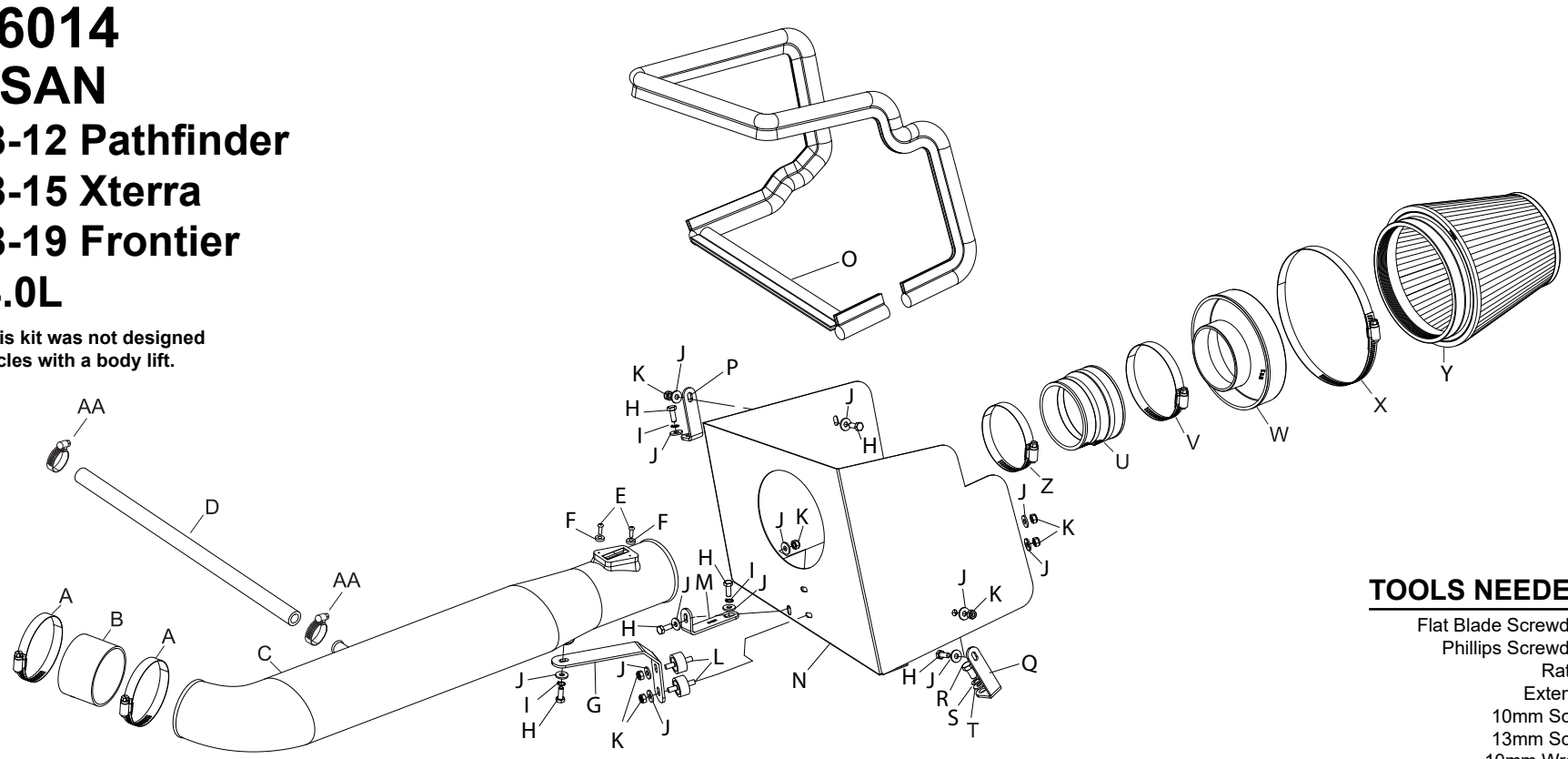

TOOLS NEEDED:

Flat Blade Screwdriver
Phillips Screwdriver
Ratchet
Extension
10mm Socket
13mm Socket
10mm Wrench
Pliers

PARTS LIST:

	Description	Qty.	Part #								
A	HOSE CLAMP #48	2	08601	J	WASHER; 1/4"ID X 5/8"OD FLAT	13	08275	S	WASHER; 8MM WAVE	1	08239
B	HOSE SILICONE	1	08434	K	NUT; 6MM NYLOCK	7	07553	T	WASHER; 5/16"ID X 5/8"OD FLAT	1	08276
C	INTAKE TUBE	1	087177A	L	STUD; M6 M/M RUBBER MNTD	2	07027	U	HOSE; STEP SILICONE	1	08051
D	HOSE; 5/8"ID X 17"L	1	5-7017	M	BRACKET; LG. "L"	1	010051	V	HOSE CLAMP #56	1	08620
E	SCREW; M4-.7 X 12MM, B/H/A	2	07726	N	HEAT SHIELD	1	07689	W	ADAPTER #380	1	21512-1
F	SPACER	2	06503	O	EDGE TRIM	1	102503	X	HOSE CLAMP #104	1	08697
G	BRACKET	1	070106	P	BRACKET; SM. "L"	1	07805	Y	AIR FILTER	1	RF-1014
H	BOLT; 6MM-1.00 X 16MM HEX	6	07703	Q	BRACKET; MED. "L"	1	070632	Z	HOSE CLAMP #52	1	08610
I	WASHER; 1/4" LOCK	3	08198	R	BOLT; 8MM-1.25 X 16MM HEX	1	07844	AA	HOSE CLAMP #10	2	08411

If you need any assistance please call 1-800-858-3333 to speak with a representative in our Customer Service Center before returning the product.

NOTE: FAILURE TO FOLLOW INSTALLATION INSTRUCTIONS AND NOT USING THE PROVIDED HARDWARE MAY DAMAGE THE INTAKE TUBE, THROTTLE BODY AND ENGINE.

TO START:

1. Turn off the ignition and disconnect the negative battery cable.
NOTE: Disconnecting the negative battery cable erases pre-programmed electronic memories. Write down all memory settings before disconnecting the negative battery cable. Some radios will require an anti-theft code to be entered after the battery is reconnected. The anti-theft code is typically supplied with your owner's manual. In the event your vehicles' anti-theft code cannot be recovered, contact an authorized dealership to obtain your vehicles anti-theft code.



2. Disconnect the mass air sensor electrical connection and unhook the harness from the air box.



3. Remove the two bolts shown, which secure the engine cover.



4. Lift firmly on the engine cover to dislodge it from the mounting grommets, and then remove the cover from the engine as shown.

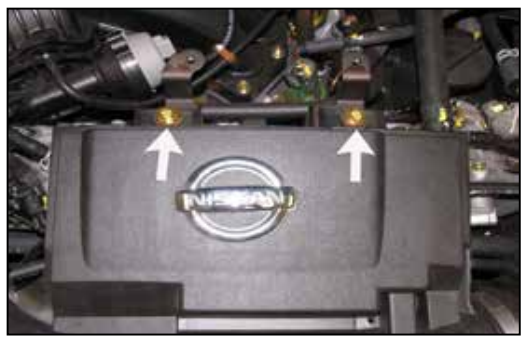

5. Remove the two bolts shown which secure the stock intake tube to the engine.



6. Using pliers, loosen the spring clamp which secures the crank case vent hose to the valve cover and then remove the hose from the valve cover as shown.



7. Loosen the two hose clamps shown which secure the stock intake tube to the air box and to the throttle body.



8. Remove the intake tube from the vehicle as shown.



9. Remove the air box retaining bolt shown.