TRAIL FORTRESS

BUILT FOR THE TRAIL. CHECKED FOR YOUR TRUCK.

K&N 63-3113 Installation Instructions

63 Series Intake for Silverado & Sierra 1500 (2019-2026)

Part number: 63-3113

trailfortress.com/k-n-performance-air-intake-system-63-3113

Scan for fitment, price and install help

AIRCHARGER® HIGH-FLOW INTAKE SYSTEMS

INSTALLATION INSTRUCTIONS

Not legal for sale or use in California on any pollution controlled motor vehicle.

63-3113
CHEVROLET / GMC
2019-25 SILVERADO / SIERRA
L4-2.7L

NOTE: This kit was not designed to fit vehicles with a body lift.

TOOLS NEEDED:

Ratchet
Extension
10mm Deep Socket
3mm Allen Key
4mm Allen Key
t10 Torx
t20 Torx
Phillips Screw Driver
Flat Blade Screw Driver
Pick

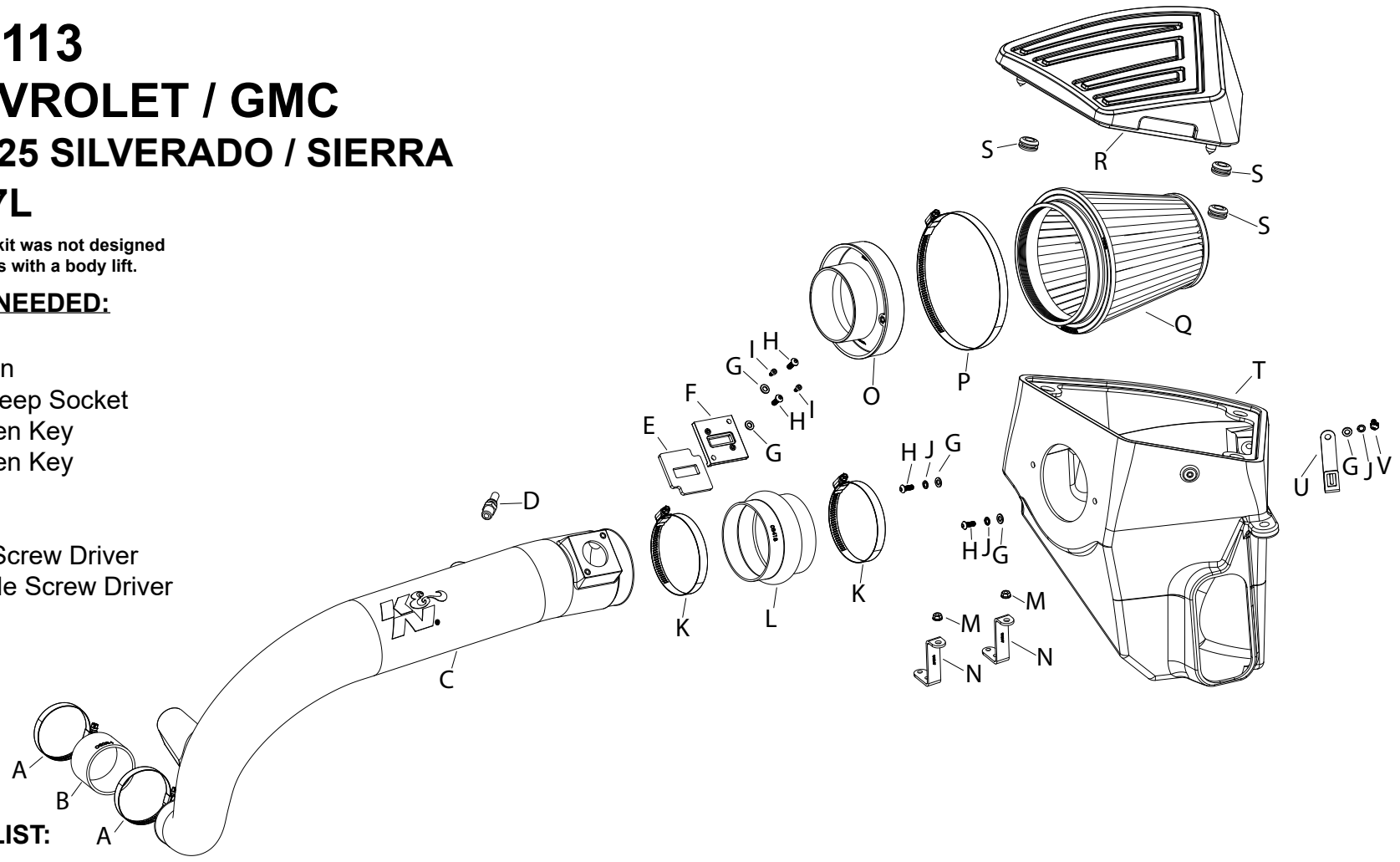

PARTS LIST:

	Description	Qty.	Part #		Description	Qty.	Part #		Description	Qty.	Part #
A	HOSE CLAMP; #40	2	08554	I	BOLT; M4.7 X 8MM ALHD CAP	2	07733	Q	AIR FILTER	1	RU-1041
B	HOSE; 2.5”ID X 2”L	1	08284	J	WASHER, M6 SPLIT LOCK ZINC	3	1-3025	R	LID; (ME)	1	087420A
C	TUBE; (MU)	1	087437	K	HOSE CLAMP; #64 STAINLESS	2	08645	S	GROMMET; 1”OD, 1/2”ID	3	08064
D	VENT; STRT 1/4” NPT	1	08938	L	HOSE; HUMP 4”ID X 3”L	1	08418	T	AIRBOX; (MD)	1	087419A
E	GASKET; 3/16” PORON	1	09069	M	NUT; M6, HEX, SERRATED	2	444.460.04	U	BRACKET	1	064358A
F	ADAPTOR; MAF SENSOR	1	21515-1	N	BRACKET; “Z”	2	010047	V	BOLT; M6 X 1 X 12MM HEXHD	1	07727
G	WASHER; 6MM FLAT	5	08269	O	ADAPTER #454	1	27300				
H	BOLT; M6 X 1 X 16MM BTNHD	4	07730	P	HOSE CLAMP #104	1	08697				

If you need any assistance please call 1-800-858-3333 to speak with a representative in our Customer Service Center before returning the product.

NOTE: FAILURE TO FOLLOW INSTALLATION INSTRUCTIONS AND NOT USING THE PROVIDED HARDWARE MAY DAMAGE THE INTAKE TUBE, THROTTLE BODY AND ENGINE.

TO START:

1. Turn off the ignition and disconnect the negative battery cable.
NOTE: Disconnecting the negative battery cable erases pre-programmed electronic memories. Write down all memory settings before disconnecting the negative battery cable. Some radios will require an anti-theft code to be entered after the battery is reconnected. The anti-theft code is typically supplied with your owner’s manual. In the event your vehicles anti-theft code cannot be recovered, contact an authorized dealership to obtain your vehicles anti-theft code.



2. Disconnect the mass air sensor electrical connection and loosen the hose clamp that secures the factory intake tube to the air filter housing.

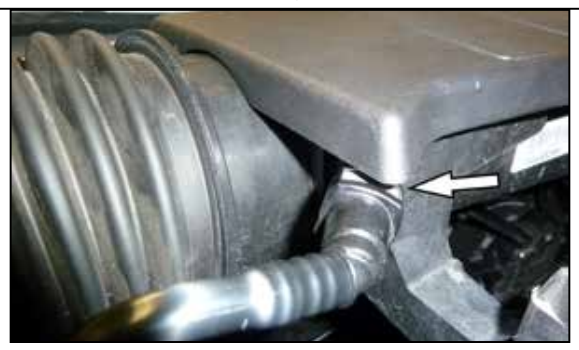

3. Depress the locking tab and then disconnect the CCV pipe from the plenum.



4. Depress the locking tap and then disconnect the CCV pipe from the solenoid attached to the factory intake tube. Disconnect the solenoid electrical connection.



5. Loosen the hose clamp that secures intake tube to the turbo inlet.



6. Remove the two bolts that secure the engine cover to the engine and then remove the cover from the vehicle. These bolts will be reused in a later step.