TRAIL FORTRESS

BUILT FOR THE TRAIL. CHECKED FOR YOUR TRUCK.

K&N 63-3109 Installation Instructions

63 Series Intake for Silverado 1500 & Escalade

Part number: 63-3109

trailfortress.com/k-n-performance-air-intake-system-63-3109

Scan for fitment, price and install help

INSTALLATION INSTRUCTIONS

AIRCHARGER® HIGH-FLOW INTAKE SYSTEMS

Not legal for sale or use in California on any pollution controlled motor vehicle.

63-3109
CHEVROLET / GMC / CADILLAC
2019-25 Silverado / Sierra
2021-25 Tahoe / Suburban
2021-25 Yukon / Yukon XL
2021-25 Escalade / Escalade ESV
V8-5.3L / 6.2L

NOTE: This kit was not designed to fit vehicles with a body lift.

TOOLS NEEDED:

ratchet
extension
10mm deep socket
3mm allen key
4mm allen key
t10 torx
t20 torx
phillips screw driver
flat blade screw driver
90° pick

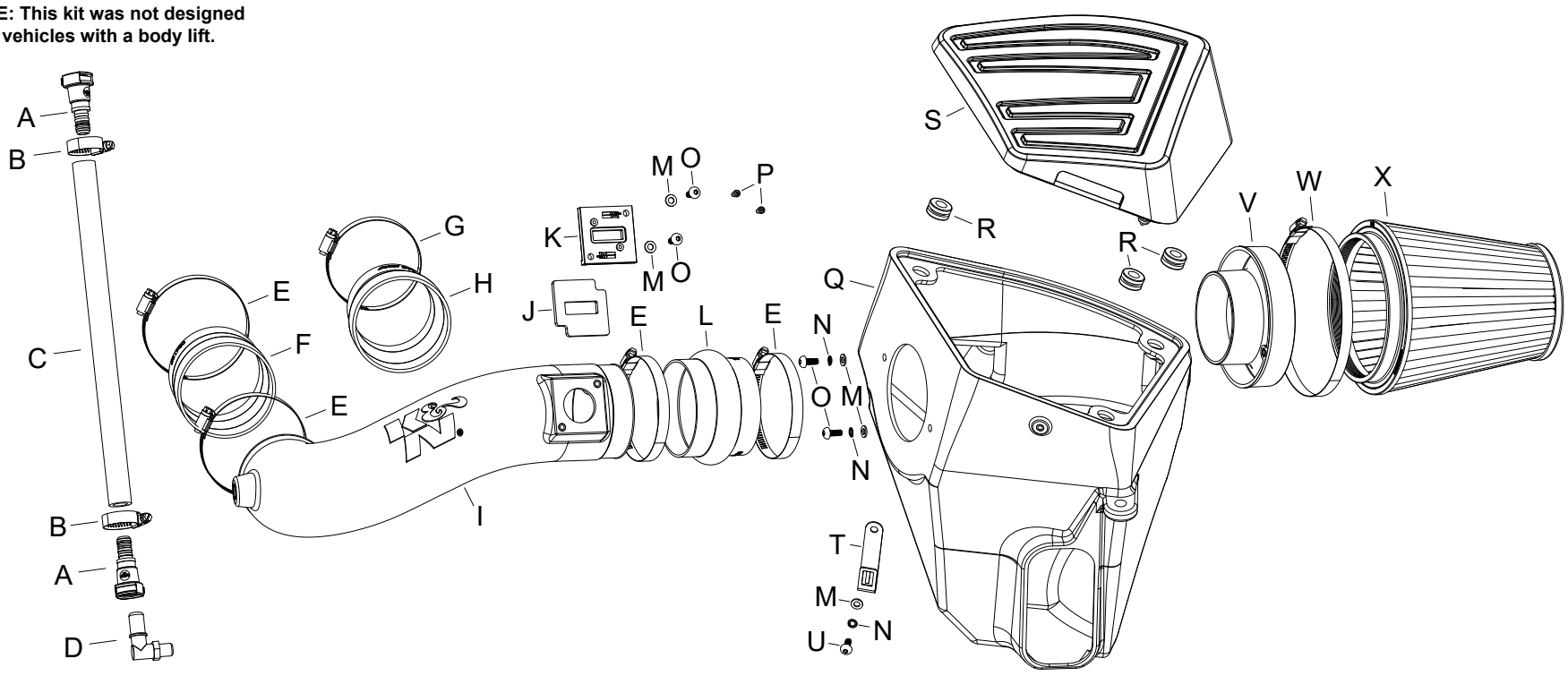

PARTS LIST:

	Description	Qty.	Part #		Description	Qty.	Part #		Description	Qty.	Part #
A	VENT; STRT QUICK DISC.	2	08526	I	TUBE; MC	1	087418A	Q	AIRBOX; MD	1	087419A
B	HOSE CLAMP #10 MINI	2	08411	J	GASKET; 3/16" PORON	1	09069	R	GROMMET; 1"OD,1/2"ID,1/2"	3	08064
C	HOSE; 5/8"ID X 15"L	1	5-7015	K	ADAPTOR; MAF SENSOR	1	21515-1	S	LID; ME	1	087420A
D	VENT; 90"D, 1/4"NPT, QUICK	1	82633	L	HOSE; HUMP 4"ID X 3"L	1	08418	T	BRACKET	1	064358A
E	HOSE CLAMP; #64 STAINLESS	4	08645	M	WASHER; 6MM FLAT	5	08269	U	BOLT; M6 X 1 X 12MM HEXHD	1	07727
F	HOSE; 4"ID TO 3-13/16"ID X 3"L	1	084107	N	WASHER, M6 SPLIT LOCK ZINC	3	1-3025	V	ADAPTOR; #454	1	27300
G	HOSE CLAMP #56	1	08620	O	BOLT; M6 X 1 X 16MM BTNHD	4	07730	W	HOSE CLAMP; #104	1	08697
H	HOSE; 4"ID TO 3.5"ID X 3"L	1	08497	P	BOLT; M4-.7 X 8MM A/HD	2	07733	X	AIR FILTER	1	RU-1041

If you need any assistance please call 1-800-858-3333 to speak with a representative in our Customer Service Center before returning the product.

NOTE: FAILURE TO FOLLOW INSTALLATION INSTRUCTIONS AND NOT USING THE PROVIDED HARDWARE MAY DAMAGE THE INTAKE TUBE, THROTTLE BODY AND ENGINE.

TO START:

1. Turn off the ignition and disconnect the negative battery cable.
NOTE: Disconnecting the negative battery cable erases pre-programmed electronic memories. Write down all memory settings before disconnecting the negative battery cable. Some radios will require an anti-theft code to be entered after the battery is reconnected. The anti-theft code is typically supplied with your owner's manual. In the event your vehicles anti-theft code cannot be recovered, contact an authorized dealership to obtain your vehicles anti-theft code.



2. Disconnect the mass air sensor electrical connection.



3. Depress the locking tabs and then disconnect the crank case vent line from the intake plenum and valve cover vent port.



4. Loosen the hose clamps that secure the intake plenum assembly to the throttle body and air filter housing. Disconnect the plenum from the air filter housing and then rotate the plenum assembly counter clockwise to disengage the keyed mount and then remove the plenum from the throttle body.
NOTE: Wiring harness anchored to plenum will need to be detached before removing from vehicle.