TRAIL FORTRESS

BUILT FOR THE TRAIL. CHECKED FOR YOUR TRUCK.

K&N 63-3092 Installation Instructions

63 Series Intake for Chevrolet Camaro SS (2016-2024)

Part number: 63-3092

trailfortress.com/k-n-performance-air-intake-system-63-3092

Scan for fitment, price and install help

AIRCHARGER® HIGH-FLOW INTAKE KITS

NOT LEGAL FOR SALE OR USE ON ANY POLLUTION CONTROLLED MOTOR VEHICLE IN CALIFORNIA OR STATES ADOPTING CALIFORNIA EMISSION PROCEDURES.
See knfilters.com for CARB status on each part for a specific vehicle

INSTALLATION INSTRUCTIONS

63-3092
CHEVROLET
2016-24 Camaro SS
V8-6.2L

TOOLS NEEDED:

Ratchet
Extension
T50 Torx
T20 Torx
10mm Socket
3mm Allen Key
4mm Allen Key
10mm Wrench
Flat Blade Screw Driver
Pliers

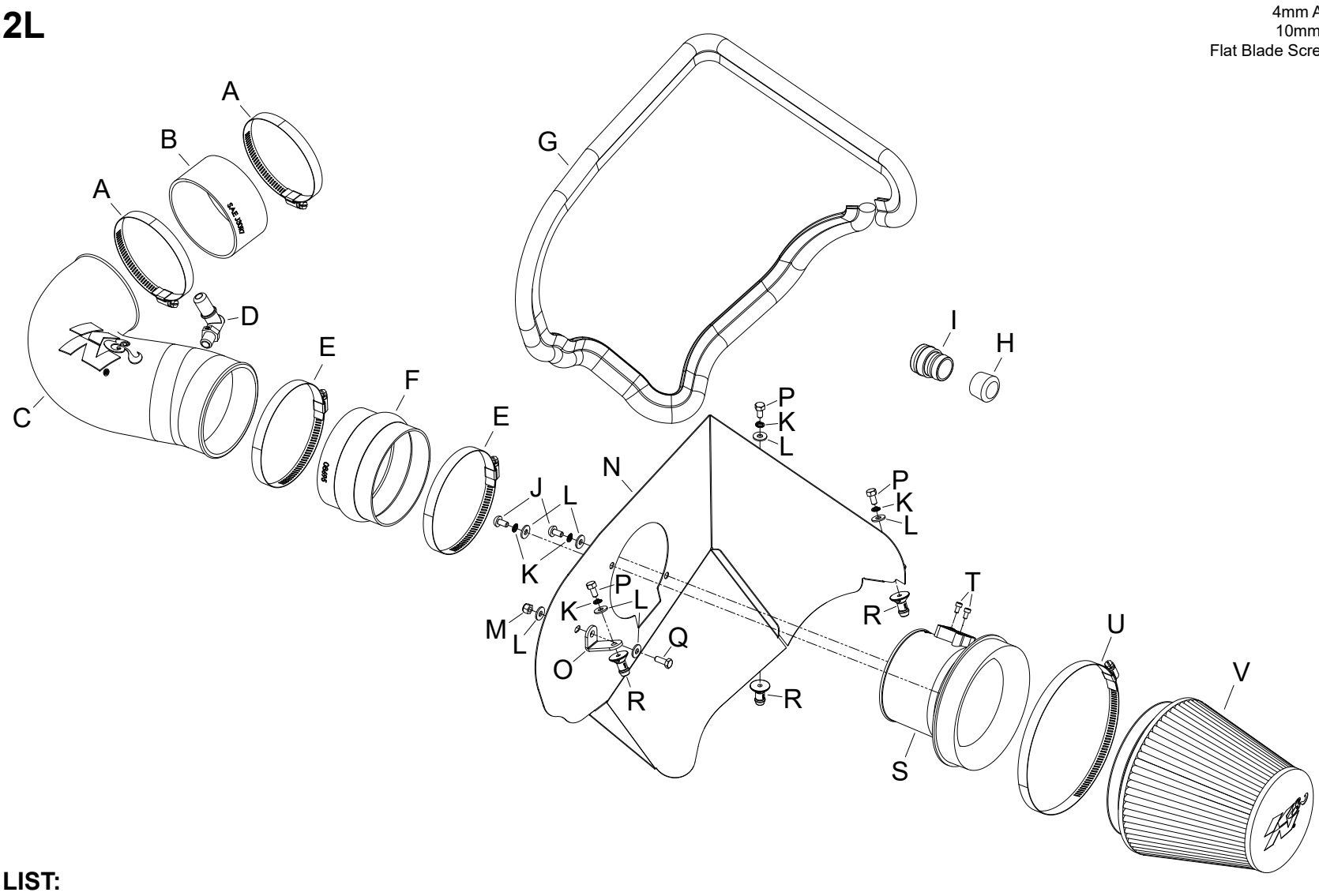

PARTS LIST:

	Description	Qty.	Part #		Description	Qty.	Part #		Description	Qty.	Part #
A	HOSE CLAMP #64 STAINLESS	2	08645	H	CAPLUG; 15/16" ID, 3/4" L, BLK	1	08246	O	BRACKET; "L"	1	064340A
B	HOSE; 4" ID X 2" L	1	08761	I	ADAPTOR; 1-1/8"OD QUICK	1	088012	P	BOLT; M6 X 1 X 12MM, HEXHD	3	07727
C	INTAKE TUBE; (KX)	1	087320A	J	BOLT; M6-1 X 12MM, BTNHD	2	07794	Q	BOLT; M6-1 X 16MM, HEX	1	07812
D	VENT; 90”D, 1/4”NPT TO .600"	1	82633	K	WASHER, M6 SPLIT LOCK ZINC	5	1-3025	R	MOUNT, PLASTIC AIRBOX	3	8-186-1
E	HOSE CLAMP #72	2	08671	L	WASHER; 6MM FLAT	7	08269	S	ADAPTER; MAF SENSOR	1	088035
F	HOSE; HUMP 4.5”ID X 3”L	1	08695	M	NUT; 6MM NYLOCK, HEXHD	1	07512	T	BOLT; M4-.7 X 8MM, ALNHD	2	07733
G	EDGE TRIM; (61"L)	1	102492	N	HEAT SHIELD	1	073227A	U	HOSE CLAMP #104	1	08697
								V	AIR FILTER	1	RU-1042

If you need any assistance please call 1-800-858-3333 to speak with a representative in our Customer Service Center before returning the product.

NOTE: FAILURE TO FOLLOW INSTALLATION INSTRUCTIONS AND NOT USING THE PROVIDED HARDWARE MAY DAMAGE THE INTAKE TUBE, THROTTLE BODY AND ENGINE.

TO START:

1. Turn off the ignition and disconnect the negative battery cable.
NOTE: Disconnecting the negative battery cable erases pre-programmed electronic memories. Write down all memory settings before disconnecting the negative battery cable. Some radios will require an anti-theft code to be entered after the battery is reconnected. The anti-theft code is typically supplied with your owner’s manual. In the event your vehicles anti-theft code cannot be recovered, contact an authorized dealership to obtain your vehicles anti-theft code.



2. Disconnect the mass air sensor electrical connection.



3. Disconnect the crank case vent quick connect fitting from the intake tube.