TRAIL FORTRESS

BUILT FOR THE TRAIL. CHECKED FOR YOUR TRUCK.

K&N 63-3074 Installation Instructions

63 Series Intake for Chevrolet Camaro SS (2010-2015)

Part number: 63-3074

trailfortress.com/k-n-performance-air-intake-system-63-3074

Scan for fitment, price and install help

AIRCHARGER® HIGH-FLOW INTAKE KITS

LEGAL IN CALIFORNIA ONLY FOR RACING VEHICLES WHICH MAY NEVER BE USED, REGISTERED OR LICENSED FOR USE UPON A HIGHWAY.

See knfilters.com for CARB status on each part for a specific vehicle

INSTALLATION INSTRUCTIONS

63-3074
CHEVROLET
2010-15 Camaro SS
V8-6.2L

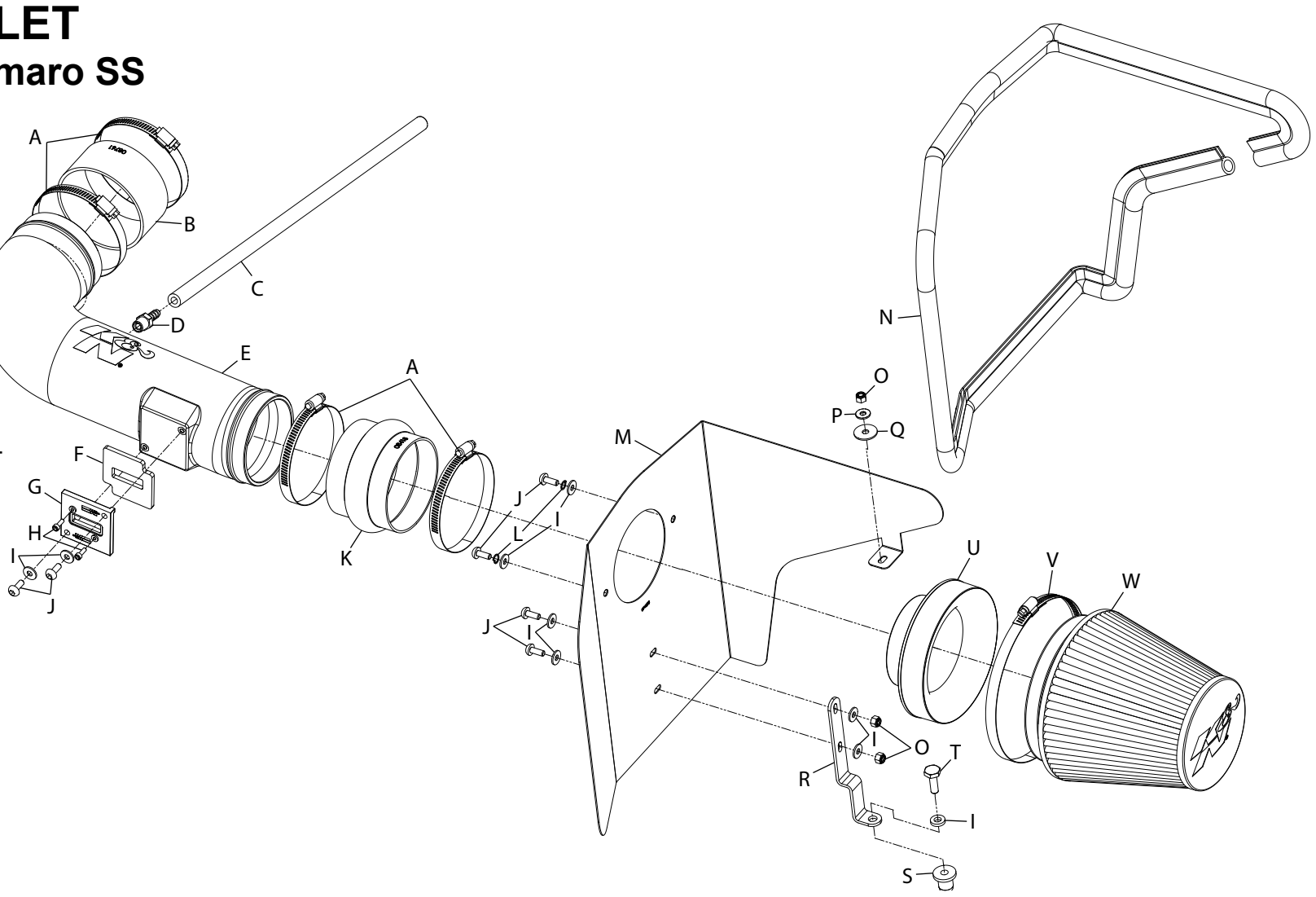

TOOLS NEEDED:

3mm Allen Wrench
4mm Allen Wrench
10mm Socket
13mm Socket
Extension
Flat Blade Screwdriver
Phillips Screwdriver
Ratchet

PARTS LIST:

	Description	Qty.	Part #								
A	HOSE CLAMP #64 STAINLESS	4	08645	I	WASHER; 6MM FLAT	9	08269	Q	WASHER; 1" X .300 X .100 RUBBER	1	21685
B	HOSE; 4" ID X 2" L	1	08761	J	BOLT; M6 X 1 X 16MM , BTTNHD	6	07730	R	BRACKET; "Z", STL, TK/PC	1	083126A
C	HOSE; 8MM ID X 21" L	1	08409	K	HOSE; HUMP 4"ID X 3"L	1	08418	S	INSERT; 5/16-18 X .600 OD X .730L	1	088002
D	VENT; STRT, 5/16" BARBED, 1/4 NPT	1	08908	L	WASHER; 1/4" LOCK, ZN	2	08198	T	BOLT; 5/16"- 18 X 1"L	1	07777
E	INTAKE TUBE	1	087232A	M	HEAT SHIELD	1	074053A	U	ADAPTOR; #454	1	27300
F	GASKET; 3/16 PORON	1	09069	N	EDGE TRIM (70")	1	102454	V	HOSE CLAMP # 104	1	08697
G	ADAPTOR; NYLON 6/6 GF,	1	21515-1	O	NUT; 6MM NYLOCK, HEX	3	07512	W	AIR FILTER	1	RU-1042
H	BOLT; M4 - .7 8MM, A/H CAP	2	07733	P	WASHER; 5/16"ID X 5/8"OD, FLAT	1	08276				

If you need any assistance please call 1-800-858-3333 to speak with a representative in our Customer Service Center before returning the product.

NOTE: FAILURE TO FOLLOW INSTALLATION INSTRUCTIONS AND NOT USING THE PROVIDED HARDWARE MAY DAMAGE THE INTAKE TUBE, THROTTLE BODY AND ENGINE.

TO START:

1. Turn off the ignition and disconnect the negative battery cable.
NOTE: Disconnecting the negative battery cable erases pre-programmed electronic memories. Write down all memory settings before disconnecting the negative battery cable. Some radios will require an anti-theft code to be entered after the battery is reconnected. The anti-theft code is typically supplied with your owner's manual. In the event your vehicles' anti-theft code cannot be recovered, contact an authorized dealership to obtain your vehicles anti-theft code.



2. Disconnect the mass air sensor electrical connection.



3. Remove the oil filler cap and then lift up and remove the engine cover. Reinstall the oil filler cap.
NOTE: On 2014 and later vehicles, the manufacturer changed the crank case vent system. The crank case vent tube will need to be unhooked from the oil filler cap before the cap can be removed from the engine.



4. Disconnect the crank case vent tube from the intake resonator as shown.



5. Loosen the hose clamps which secure the stock intake tube to the air box and throttle body.



6. Remove the stock intake tube as shown.



7. Rotate the crank case vent tube 180°, then release the retainer at the valve cover port and then remove the crank case vent tube from the valve cover port.



8. Remove the two air box retaining nuts shown.



9. Lift up and remove the air box from the vehicle.
NOTE: K&N Engineering, Inc., recommends that customers do not discard factory air intake.



10. Remove the air box mounting grommet shown from the frame rail.

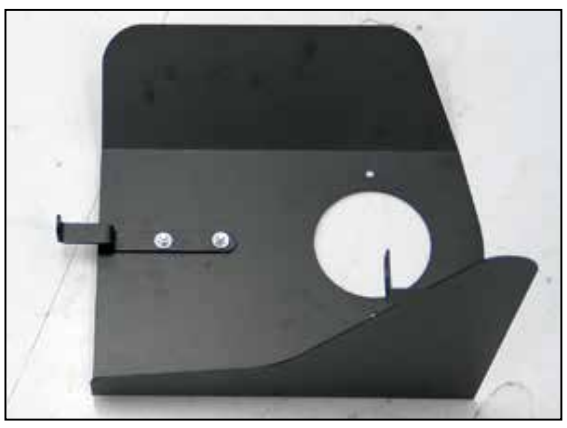

11. Install the heat shield mounting bracket (083126) onto the heat shield as shown using the provided hardware.



12. Install the filter adapter onto the heat shield and secure with the provided hardware.



13. Install the edge trim onto the heat shield as shown.
NOTE: Some trimming of the edge trim will be necessary.



14. Install the inserted nut onto the heat shield mounting bracket using the provided hardware. Do not completely tighten at this time.



15. Install the heat shield assembly into the vehicle so the inserted nut goes into the air box mounting grommet hole and the tab goes onto the air box mounting stud. Secure the heat shield with the provided hardware.



16. Install the silicone hose (08761) onto the throttle body and secure with the provided hose clamp.



17. Install the silicone hose (08418) onto the filter adapter and secure with the provided hose clamp.



18. Remove the two screws and then remove the mass air sensor from the factory air box.



19. Install the provided gasket onto the mass air sensor adapter as shown.



20. Install the mass air sensor into the adapter and secure with the provided hardware.

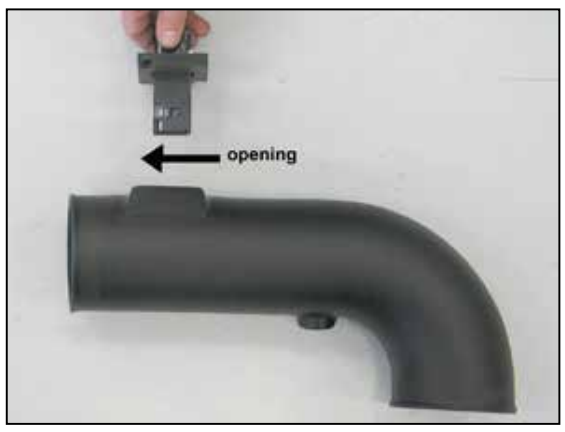

21. Install the mass air sensor assembly into the K&N® intake tube and secure with the provided hardware.
NOTE: Be sure to place the mass air sensor with the opening pointed towards the filter end of the tube.

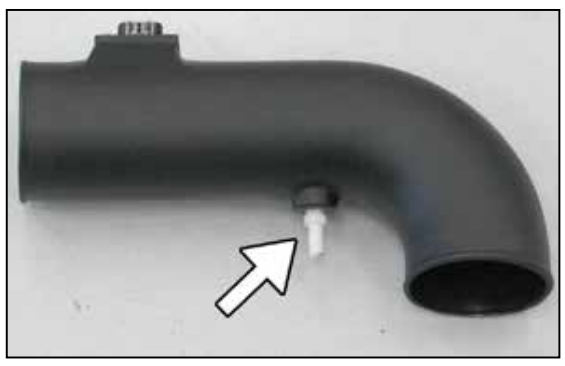

22. Install the provided 1/4 NPT fitting into the K&N® intake tube as shown.
NOTE: Plastic NPT fittings are easy to cross thread. Install the vent fitting "hand" tight, then turn it two complete turns with a wrench.



23. Install the K&N® intake tube assembly into the silicone hose at the filter adapter and then into the silicone hose at the throttle body and secure with the provided hose clamps.



24. Attach the provided crank case vent hose to the 1/4” NPT fitting and then attach the open end to the vent port on the valve cover.
NOTE: On 2014 and later model vehicles, see the next step for crank case vent hose to engine connection.



24a. On 2014 and later vehicles, it will be necessary to cut the crank case vent tube as shown. Then connect the cut section of tube to the oil filler cap. Attach the supplied hose to the to the trimmed section of crank case vent tube,



25. Install the K&N® air filter onto the filter adapter and secure with the provided hose clamp.
NOTE: Drycharger® air filter wrap; part # RF-1042DK is available to purchase separately. To learn more about Drycharger® filter wraps or look up color availability please visit http://www.knfilters.com®.

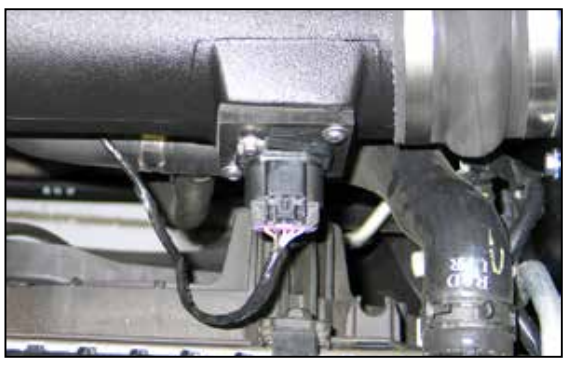

26. Reconnect the mass air sensor electrical connection.



27. Reinstall the engine cover.



28. Reconnect the vehicle’s negative battery cable. Double check to make sure everything is tight and properly positioned before starting the vehicle.

29. It will be necessary for all K&N® high flow intake systems to be checked periodically for realignment, clearance and tightening of all connections. Failure to follow the above instructions or proper maintenance may void warranty.

ROAD TESTING:

1. Start the engine with the transmission in neutral or park, and the parking brake engaged. Listen for air leaks or odd noises. For air leaks secure hoses and connections. For odd noises, find cause and repair before proceeding. This kit will function identically to the factory system except for being louder and much more responsive.

2. Test drive the vehicle. Listen for odd noises or rattles and fix as necessary.

3. If road test is fine, you can now enjoy the added power and performance from your kit.

4. K&N Engineering, Inc., requires cleaning the intake system’s air filter element every 100,000 miles. When used in dusty or off-road environments, our filters will require cleaning more often. We recommend that you visually inspect your filter once every 25,000 miles to determine if the screen is still visible. When the screen is no longer visible some place on the filter element, it is time to clean it. To clean and re-oil, purchase our filter Recharger® service kit, part number 99-5050 or 99-5000 and follow the easy instructions.

LEGAL IN CALIFORNIA ONLY FOR RACING VEHICLES WHICH MAY NEVER BE USED, REGISTERED OR LICENSED FOR USE UPON A HIGHWAY.

See knfilters.com for CARB status on each part for a specific vehicle

• 1455 CITRUS ST., P.O. BOX 1329, RIVERSIDE, CA., U.S.A. 92502 • TECH SERVICE 800-858-3333 • FAX 951-826-4001
• e-mail: tech@knfilters.com® • WWW: http://www.knfilters.com®

18886L
10/22/20

trailfortress.com/k-n-performance-air-intake-system-63-3074