TRAIL FORTRESS

BUILT FOR THE TRAIL. CHECKED FOR YOUR TRUCK.

K&N 63-3059 Installation Instructions

Cold Air Intake for Impala, Monte Carlo & Grand Prix

Part number: 63-3059

trailfortress.com/k-n-performance-air-intake-system-63-3059

Scan for fitment, price and install help

AIRCHARGER® HIGH-FLOW INTAKE KITS

LEGAL IN CALIFORNIA ONLY FOR RACING VEHICLES WHICH MAY NEVER BE USED, REGISTERED OR LICENSED FOR USE UPON A HIGHWAY.

See knfilters.com for CARB status on each part for a specific vehicle

INSTALLATION INSTRUCTIONS

63-3059
CHEVROLET / PONTIAC
2006-07 Monte Carlo
2006-08 Grand Prix
2006-09 Impala SS
V8-5.3L

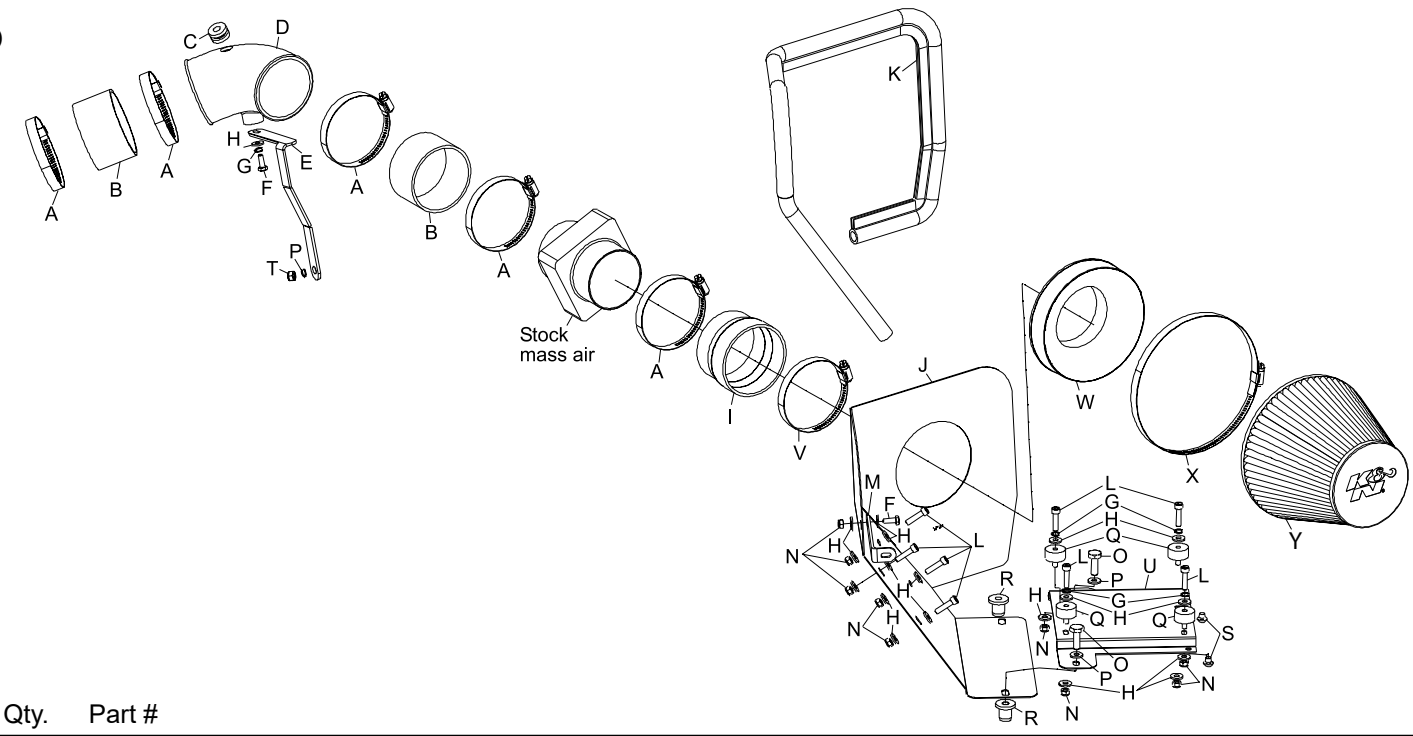

TOOLS NEEDED:

1/2” socket
5mm allen wrench
10mm socket
13mm socket
10mm wrench
27 torx socket
extension
flat blade screwdriver
ratchet

PARTS LIST:

	Description	Qty.	Part #								
A	HOSE CLAMP #52	5	08610	J	HEAT SHIELD	1	07674	S	RUBBER PLUG; 1/4”	2	08162
B	HOSE; 3.25”ID X 2”L	2	08690	K	EDGE TRIM 44”	1	102486A	T	NUT; 8MM NYLOCK	1	07542
C	GROMMET; 15/16”OD, 3/8”ID, 17/32”THK	1	08100	L	BOLT; 6MM-1.00 X 25MM ALLEN	8	07859	U	PROCESSOR BRACKET	1	26628-1
D	INTAKE TUBE (FV)	1	087194A	M	BRACKET; SMALL “L”	1	070952A	V	HOSE CLAMP #56	1	08620
E	BRACKET; LARGE “L”	1	26627	N	NUT; 6MM NYLOCK	9	07553	W	FILTER ADAPTER	1	21512-1
F	BOLT; M6-1.00 X 16MM HEX HD	2	07703	O	BOLT; 5/16”- 18 X 1”L	2	07777	X	HOSE CLAMP # 104	1	08697
G	WASHER; 1/4” SPLIT LOCK	5	08198	P	WASHER; 5/8”OD X 5/16”ID	3	08276	Y	AIR FILTER	1	RU-1048
H	WASHER; 5/8”OD X 1/4”ID	19	08275	Q	RUBBER STUD, M/F, 1/2”LX 1”W	4	070228				
I	HOSE; 3.5” TO 3.25”ID X 2.5”L	1	08051	R	INSERT NUT; 5/16-18X.600ODX.730L	2	088002				

If you need any assistance please call 1-800-858-3333 to speak with a representative in our Customer Service Center before returning the product.

NOTE: FAILURE TO FOLLOW INSTALLATION INSTRUCTIONS AND NOT USING THE PROVIDED HARDWARE MAY DAMAGE THE INTAKE TUBE, THROTTLE BODY AND ENGINE.

TO START:

1. Turn off the ignition and disconnect the negative battery cable.
NOTE: Disconnecting the negative battery cable erases pre-programmed electronic memories. Write down all memory settings before disconnecting the negative battery cable. Some radios will require an anti-theft code to be entered after the battery is reconnected. The anti-theft code is typically supplied with your owner’s manual. In the event your vehicles anti-theft code cannot be recovered, contact an authorized dealership to obtain your vehicles anti-theft code.



2. Depress the locking tab on the mass air sensor electrical connection, then disconnect the mass air sensor electrical connection as shown.



3. Release the locking tab and disconnect the crank case vent tube as shown.

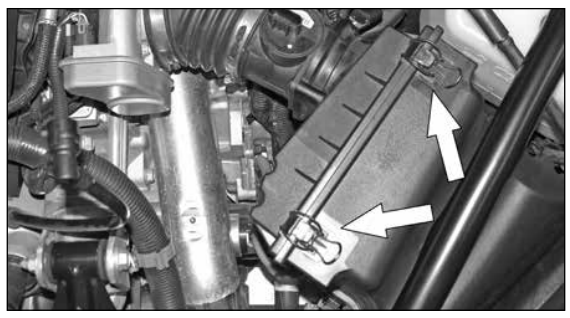

4. Loosen the hose clamp, which secures the intake tube to the throttle body, and release the air box over center clips shown.



5. Remove the air box housing half and intake tube as shown.



6. Remove the three body support brace mounting bolts shown and then remove the support brace from the engine compartment.
NOTE: It will be necessary to unhook the cruise control and wiring harness clips from the body brace.

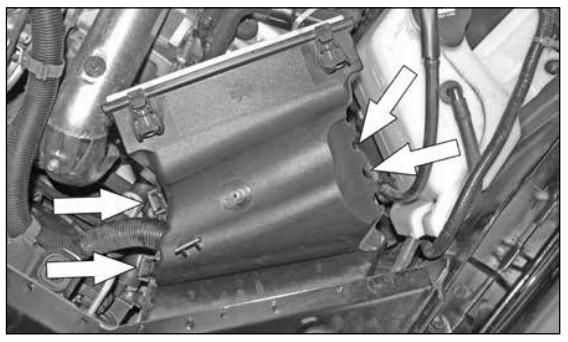

7. Depress the four air box housing retaining clips shown.



8. Remove the upper air box housing from the vehicle as shown.

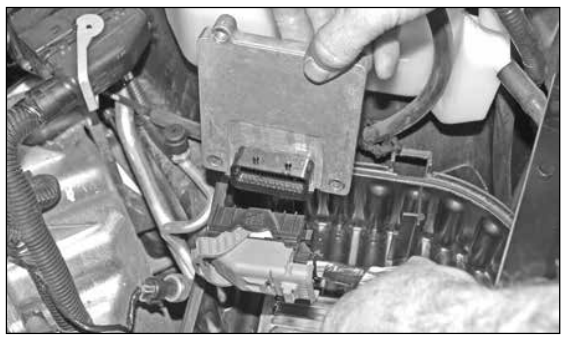

9. Remove the transmission control module from the housing, release the clamshell retaining clip, and then disconnect the wiring harness as shown.