TRAIL FORTRESS

BUILT FOR THE TRAIL. CHECKED FOR YOUR TRUCK.

K&N 63-2624 Installation Instructions

Cold Air Intake for Ford F-150 (2023-2024)

Part number: 63-2624

trailfortress.com/k-n-performance-air-intake-system-63-2624

Scan for fitment, price and install help

AIRCHARGER® HIGH-FLOW INTAKE KITS

NOT LEGAL FOR SALE OR USE ON ANY POLLUTION CONTROLLED MOTOR VEHICLE IN CALIFORNIA OR STATES ADOPTING CALIFORNIA EMISSION PROCEDURES.
See knfilters.com for CARB status on each part for a specific vehicle

INSTALLATION INSTRUCTIONS

63-2624
FORD
2023-24 F150 RAPTOR R
V8-5.2L SUPERCHARGED

TOOLS NEEDED:

Flathead Screwdriver
13mm Wrench
90 Degree Pick
13/16” Wrench
4mm Allen Key
13mm Socket
Ratchet
Extension

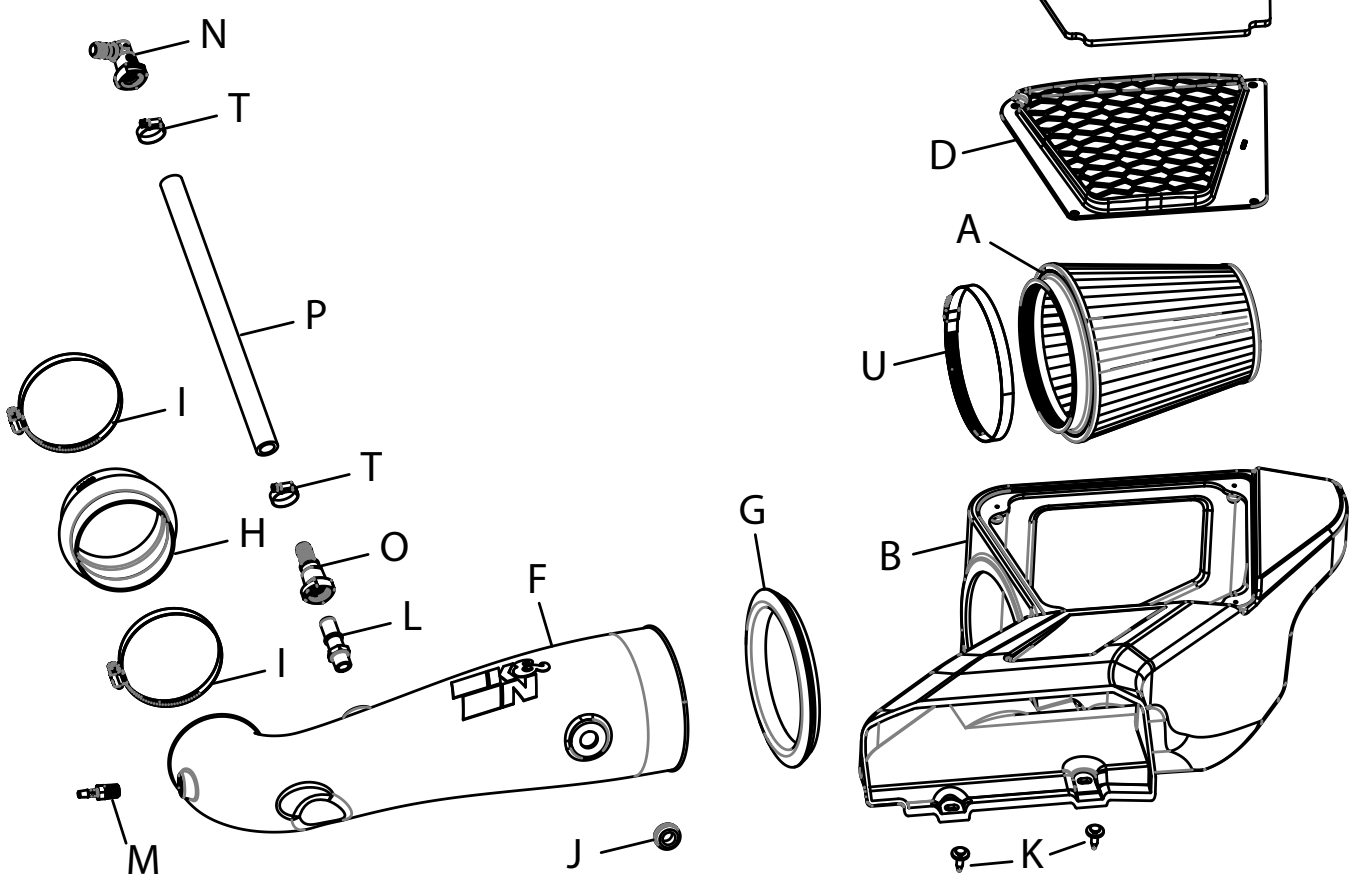

PARTS LIST:

	Description	Qty.	Part #		Description	Qty.	Part #		Description	Qty.	Part #
A	AIR FILTER	1	RU-1044XD	H	HOSE; HUMP 4”ID X 3”L	1	08418	O	FITTING; STRT QUICK DISCONNECT	1	08526
B	AIRBOX	1	087577	I	HOSE CLAMP; #64	2	08645	P	HOSE; 5/8”ID X 14”L	1	084083
C	FRAME; PRECLEANER TOP	1	088214	J	GROMMET; 9/16”ID	1	KITGRMT02	Q	SCREW; M6 X 20MM	4	KIT20BHC3060
D	FRAME; PRECLEANER BOTTOM	1	088215	K	CLIP; RETAINER BODY NYLON	2	KITRETCLIP02	R	WASHER; 6MM FLAT	4	08269
E	INSERT; FOAM	1	971978	L	FITTING; 3/8NPT QC	1	82637	S	WASHER; M6, SPLIT LOCK	4	1-3025
F	TUBE	1	087578	M	VENT; STRT, 1/4”HOSE BARB	1	08046	T	HOSE CLAMP; #10 MINI	2	08411
G	SEAL; 6”TUBE TO AIRBOX	1	21571	N	FITTING; QUICK DISCONNECT 90*	1	KITFITTING33	U	HOSE CLAMP; #104	1	08697

If you need any assistance please call 1-800-858-3333 to speak with a representative in our Customer Service Center before returning the product.

NOTE: FAILURE TO FOLLOW INSTALLATION INSTRUCTIONS AND NOT USING THE PROVIDED HARDWARE MAY DAMAGE THE INTAKE TUBE, THROTTLE BODY AND ENGINE.

TO START:

1. Turn off the ignition and disconnect the negative battery cable.
NOTE: Disconnecting the negative battery cable erases pre-programmed electronic memories. Write down all memory settings before disconnecting the negative battery cable. Some radios will require an anti-theft code to be entered after the battery is reconnected. The anti-theft code is typically supplied with your owner’s manual. In the event your vehicles anti-theft code cannot be recovered, contact an authorized dealership to obtain your vehicles anti-theft code.

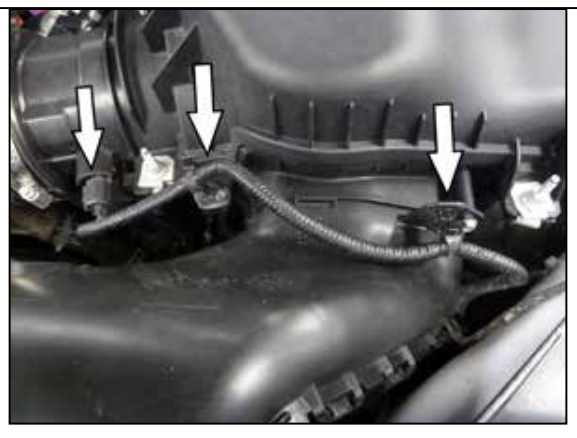

2. Disconnect the IAT sensor electrical connection and then unhook the wiring pigtail from the factory air filter housing.



3. Loosen the hose clamp securing the intake tube to the air filter housing.

Continued INSTALLATION INSTRUCTIONS



4. Remove the bolt that secures the factory air filter housing to the inner fender.



5. Remove the two plastic retaining clips that secure the fresh air intake duct to the core support.



6. Disconnect the vacuum line from the intake tube then loosen the hose clamp that secures the intake tube to the throttle body.





7. Disconnect the CCV hose from the valve cover. There are three clips inside the connector that lock the fitting onto the valve cover, using a 90 degree pick the clips can be released one at a time while applying slight pressure upwards on the fitting. The upwards pressure will help prevent the clips from relocking while releasing the others. Replacement connectors are provided to be used with the K&N intake kit.



8. Release the locking tab on the IAT sensor then rotate counterclockwise and remove the sensor from the housing.



9. Remove the O-ring from IAT sensor, install the sensor into the K&N intake tube using the provided grommet.



10. Install the provided quick connect fitting into the K&N intake tube as shown.



11. Install the provided vacuum fitting into the K&N intake tube as shown.



12. Install the provided tube seal grommet into the K&N air filter housing as shown.



13. Install the K&N intake tube through the grommet into the air filter housing as shown.



14. Install the provided step coupler onto the throttle body and secure with the provided hose clamp.



15. Install the intake assembly into the vehicle so the filter housing seats into the factory mounting grommets and the intake tube engages the coupler at the throttle body.



16. Install the two provided push clips to secure the fresh air duct.



20. Assemble the provided CCV fittings and hose as shown.



24. Reconnect the vehicle's negative battery cable. Double check to make sure everything is tight and properly positioned before starting the vehicle.



17. Secure the air filter housing to the inner fender with the factory mounting bolt.



21. Install the CCV hose assembly onto the fittings on the valve cover and intake tube.

25. It will be necessary for all K&N® high flow intake systems to be checked periodically for realignment, clearance and tightening of all connections. Failure to follow the above instructions or proper maintenance may void warranty.



18. Secure the intake tube in the coupler with the provided hose clamp.



22. Install the K&N air filter onto the intake tube and secure with the provide hose clamp.



19. Reconnect the IAT sensor electrical connection.



23. Assemble the pre filter lid and install it onto the air filter housing using the provided hardware.

ROAD TESTING:

1. Start the engine with the transmission in neutral or park, and the parking brake engaged. Listen for air leaks or odd noises. For air leaks secure hoses and connections. For odd noises, find cause and repair before proceeding. This kit will function identically to the factory system except for being louder and much more responsive.

2. Test drive the vehicle. Listen for odd noises or rattles and fix as necessary.

3. If road test is fine, you can now enjoy the added power and performance from your kit.

4. K&N Engineering, Inc., requires cleaning the intake system's air filter element every 100,000 miles. When used in dusty or off-road environments, our filters will require cleaning more often. We recommend that you visually inspect your filter once every 25,000 miles to determine if the screen is still visible. When the screen is no longer visible some place on the filter element, it is time to clean it. To clean and re-oil, purchase our filter Recharger® service kit, part number 99-5050 or 99-5000 and follow the easy instructions.

NOT LEGAL FOR SALE OR USE ON ANY POLLUTION CONTROLLED MOTOR VEHICLE IN CALIFORNIA OR STATES ADOPTING CALIFORNIA EMISSION PROCEDURES.

See knfilters.com for CARB status on each part for a specific vehicle

trailfortress.com/k-n-performance-air-intake-system-63-2624