TRAIL FORTRESS

BUILT FOR THE TRAIL. CHECKED FOR YOUR TRUCK.

K&N 63-2599 Installation Instructions

63 Series Intake for F-150, Expedition & Navigator

Part number: 63-2599

trailfortress.com/k-n-performance-air-intake-system-63-2599

Scan for fitment, price and install help

AIRCHARGER® HIGH-FLOW INTAKE SYSTEMS

INSTALLATION INSTRUCTIONS

Not legal for sale or use in California on any pollution controlled motor vehicle.

63-2599

FORD / LINCOLIN

2017-25 F150
2017-25 F150 Raptor
2018-25 Expedition
2018-21 Navigator
V6-3.5L Ecoboost

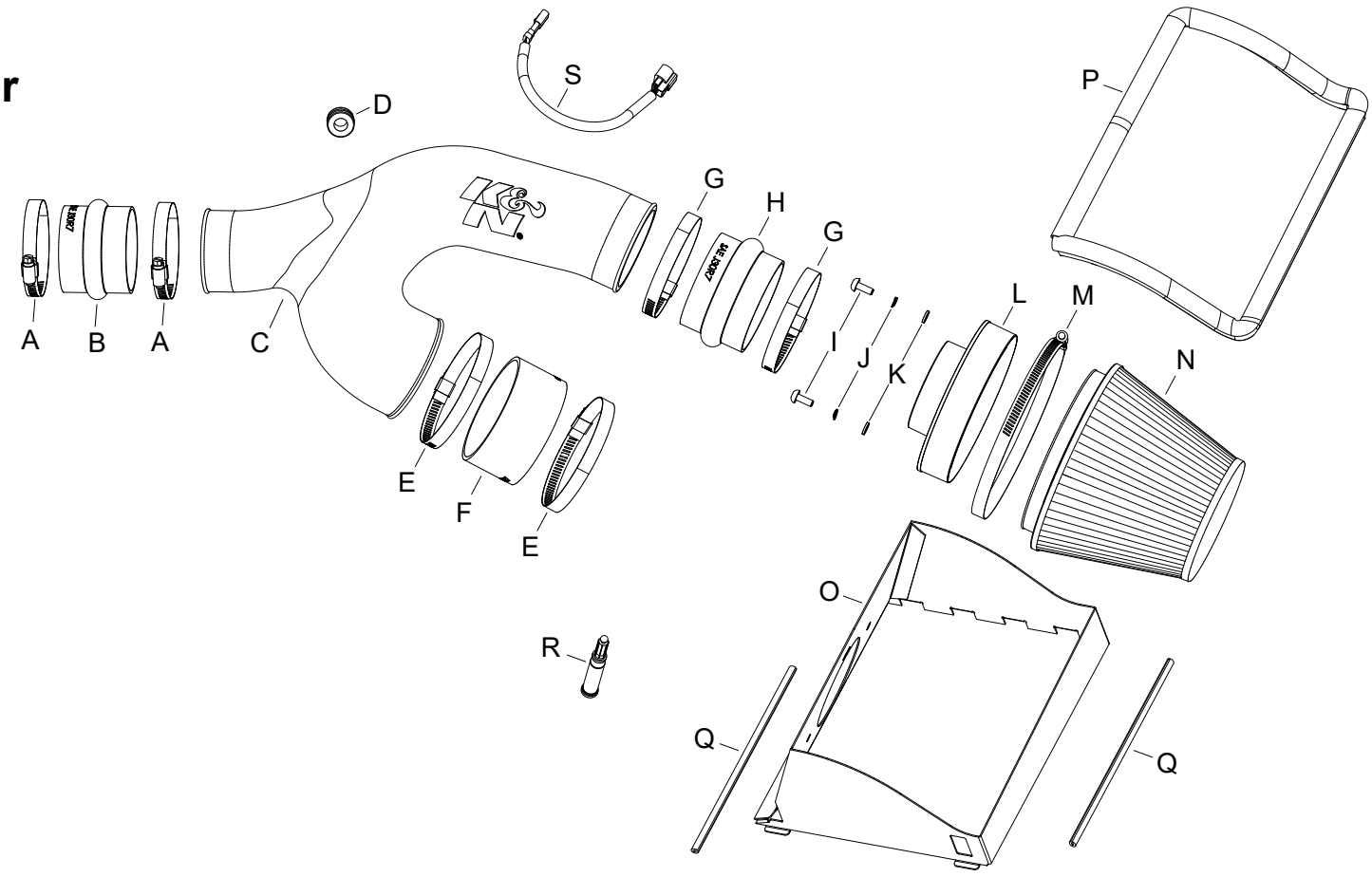

TOOLS NEEDED:

Flat Blade Screw driver
4mm allen key

PARTS LIST:

	Description	Qty.	Part #		Description	Qty.	Part #		Description	Qty.	Part #
A	HOSE CLAMP #48	2	08601	G	HOSE CLAMP #56	2	08620	M	HOSE CLAMP; #104	1	08697
B	HOSE; HUMP 3”ID X 2.5”L	1	087121	H	HOSE; HUMP 3.5”ID X 2.5”L	1	08699	N	AIR FILTER	1	RU-5173
C	INTAKE TUBE; (MA)	1	087353A	I	BOLT; M6 X 1 X 16MM BTNHD	2	07730	O	HEAT SHIELD	1	073182A
D	GROMMET; 1"OD,1/2"ID,1/2”	1	08064	J	WASHER, M6 SPLIT LOCK ZINC	2	1-3025	P	EDGE TRIM; (39")	1	102496
E	HOSE CLAMP #64 STAINLESS	2	08645	K	WASHER; 6MM FLAT	2	08269	Q	EDGE TRIM; (19”)	1	102451
F	HOSE; 4"ID X 2”L	1	08761	L	ADAPTER; UNIVERSAL, 6”	1	21512-1	R	SUPER GLUE, 3G DRIP PROOF	1	409
								S	EXTENSION HARNESS	1	21783

If you need any assistance please call 1-800-858-3333 to speak with a representative in our Customer Service Center before returning the product.

NOTE: FAILURE TO FOLLOW INSTALLATION INSTRUCTIONS AND NOT USING THE PROVIDED HARDWARE MAY DAMAGE THE INTAKE TUBE, THROTTLE BODY AND ENGINE.

TO START:

1. Turn off the ignition and disconnect the negative battery cable.
NOTE: Disconnecting the negative battery cable erases pre-programmed electronic memories. Write down all memory settings before disconnecting the negative battery cable. Some radios will require an anti-theft code to be entered after the battery is reconnected. The anti-theft code is typically supplied with your owner’s manual. In the event your vehicles anti-theft code cannot be recovered, contact an authorized dealership to obtain your vehicles anti-theft code.



2. Disconnect the inlet air temperature sensor electrical connector and remove the tape around the harness connector.



3. Loosen the hose clamp that secures the factory intake tube to the upper air filter housing.



4. Release the locking clips that secure the upper air filter housing to the lower housing, then lift the upper housing and remove it from the vehicle. Remove the factory air filter from the vehicle.



5. Loosen the two hose clamps that secure the factory intake tube to the turbo inlets, then remove the factory intake tube from the vehicle.
NOTE: K&N Engineering, Inc., recommends that customers do not discard factory air intake.

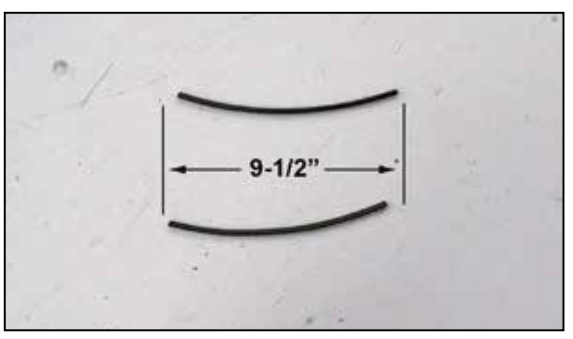

6. Cut the provided edge trim into two sections 9.5” long.

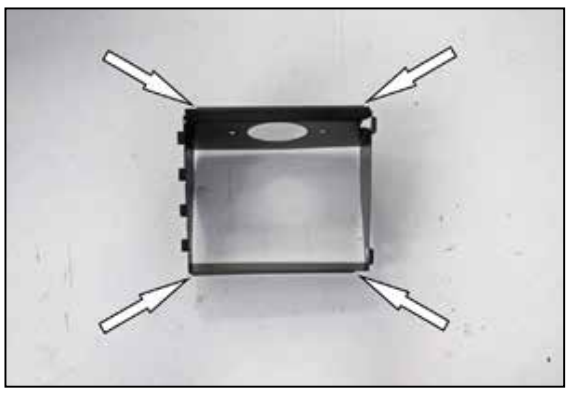

7. Install the small edge trim onto the bottom of the heat shield as shown using the provided super glue to secure it in place.



8. Install the provided bulb edge trim onto the top of the heat shield as shown.
NOTE: Some trimming of the edge trim will be necessary.



9. Install the K&N® filter adapter into the heat shield and secure with the provided hardware.



10. Install the K&N® air filter onto the filter adapter and secure with the provided hose clamp.



11. Install the heat shield/filter assembly onto the factory lower air filter housing and secure with the factory retaining clips.



12. Install the provided hump coupler (08699) onto the filter adapter and secure with the provided hose clamp.



13. Install the provided coupler (08761) onto the driver's side turbo inlet tube and secure with the provided hose clamp.



14. Install the provided coupler hose (087121) onto the passenger side turbo inlet hose and secure with the provided hose clamp.



15. Remove the inlet temperature sensor from the factory intake tube.



16. Remove the O-Ring from the inlet air temperature sensor, then install it into the grommet installed into the K&N® intake tube.
NOTE: The inlet air temperature sensor is very fragile, be careful while installing the sensor so as not to break it.



17. Install the K&N® intake tube into the couplers at the turbo inlet tubes and then into the coupler at the filter adapter, adjust the tubes for best fit and then secure with the provided hose clamps.



18. Reconnect the inlet air temperature sensor electrical connection using the provided extension harness.



19. Reconnect the vehicle's negative battery cable. Double check to make sure everything is tight and properly positioned before starting the vehicle.

20. It will be necessary for all K&N® high flow intake systems to be checked periodically for realignment, clearance and tightening of all connections.
Failure to follow the above instructions or proper maintenance may void warranty.

ROAD TESTING:

1. Start the engine with the transmission in neutral or park, and the parking brake engaged. Listen for air leaks or odd noises. For air leaks secure hoses and connections. For odd noises, find cause and repair before proceeding. This kit will function identically to the factory system except for being louder and much more responsive.

2. Test drive the vehicle. Listen for odd noises or rattles and fix as necessary.

3. If road test is fine, you can now enjoy the added power and performance from your kit.

4. K&N Engineering, Inc., requires cleaning the intake system's air filter element every 100,000 miles. When used in dusty or off-road environments, our filters will require cleaning more often. We recommend that you visually inspect your filter once every 25,000 miles to determine if the screen is still visible. When the screen is no longer visible some place on the filter element, it is time to clean it. To clean and re-oil, purchase our filter Recharger® service kit, part number 99-5050 or 99-5000 and follow the easy instructions.

trailfortress.com/k-n-performance-air-intake-system-63-2599