TRAIL FORTRESS

BUILT FOR THE TRAIL. CHECKED FOR YOUR TRUCK.

K&N 63-2592 Installation Instructions

63 Series Intake for Ford F-150 (2015-2016)

Part number: 63-2592

trailfortress.com/k-n-performance-air-intake-system-63-2592

Scan for fitment, price and install help

AIRCHARGER®
HIGH-FLOW INTAKE KITS

NOT LEGAL FOR SALE OR USE ON ANY POLLUTION CONTROLLED MOTOR VEHICLE IN CALIFORNIA OR STATES ADOPTING CALIFORNIA EMISSION PROCEDURES.
See knfilters.com for CARB status on each part for a specific vehicle

INSTALLATION INSTRUCTIONS

63-2592
FORD
2015-16 F150
V6-3.5L Ecoboost

NOTE: This kit was not designed to fit vehicles with a body lift.

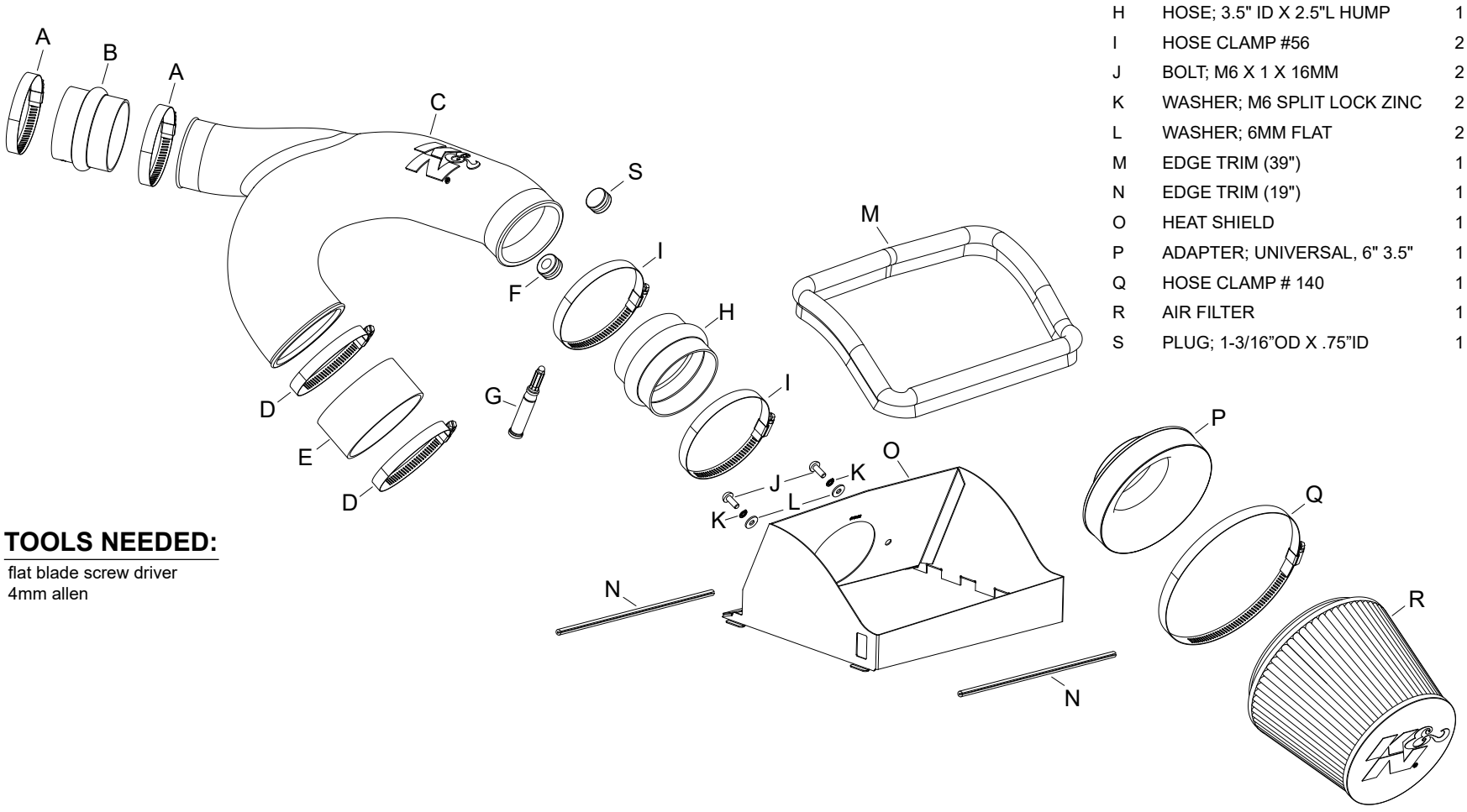

PARTS LIST:

	Description	Qty.	Part #
A	HOSE CLAMP #48	2	08601
B	HOSE; 3" ID X 2.5" L HUMP	1	087121
C	INTAKE TUBE (KC)	1	087297A
D	HOSE CLAMP #64 STAINLESS	2	08645
E	HOSE; 4" ID X 2" L	1	08761
F	GROMMET; 1" OD, 1/2" ID, 1/2"	1	08064
G	SUPER GLUE; 3G DRIP PROOF	1	409
H	HOSE; 3.5" ID X 2.5"L HUMP	1	08699
I	HOSE CLAMP #56	2	08620
J	BOLT; M6 X 1 X 16MM	2	07730
K	WASHER; M6 SPLIT LOCK ZINC	2	1-3025
L	WASHER; 6MM FLAT	2	08269
M	EDGE TRIM (39")	1	102496A
N	EDGE TRIM (19")	1	102451
O	HEAT SHIELD	1	073182A
P	ADAPTER; UNIVERSAL, 6" 3.5"	1	21512-1
Q	HOSE CLAMP # 140	1	08697
R	AIR FILTER	1	RU-5173
S	PLUG; 1-3/16"OD X .75"ID	1	09711

TOOLS NEEDED:

flat blade screw driver
4mm allen

If you need any assistance please call 1-800-858-3333 to speak with a representative in our Customer Service Center before returning the product.

NOTE: FAILURE TO FOLLOW INSTALLATION INSTRUCTIONS AND NOT USING THE PROVIDED HARDWARE MAY DAMAGE THE INTAKE TUBE, THROTTLE BODY AND ENGINE.

TO START:

1. Turn off the ignition and disconnect the negative battery cable.
NOTE: Disconnecting the negative battery cable erases pre-programmed electronic memories. Write down all memory settings before disconnecting the negative battery cable. Some radios will require an anti-theft code to be entered after the battery is reconnected. The anti-theft code is typically supplied with your owner's manual. In the event your vehicles anti-theft code cannot be recovered, contact an authorized dealership to obtain your vehicles anti-theft code.



2. Disconnect the Inlet air temperature sensor electrical connection.
NOTE: Some models may not be equipped with a inlet temperature sensor.



3. Loosen the hose clamp securing the factory intake tube to the air filter housing.



4. Release the two clips securing the upper air filter housing.



5. Lift up and remove the upper air filter housing and factory air filter.



6. Loosen the hose clamps securing the intake tube to the two turbo inlet tubes and then remove the intake tube from the vehicle.
NOTE: K&N Engineering, Inc., recommends that customers do not discard factory air intake.

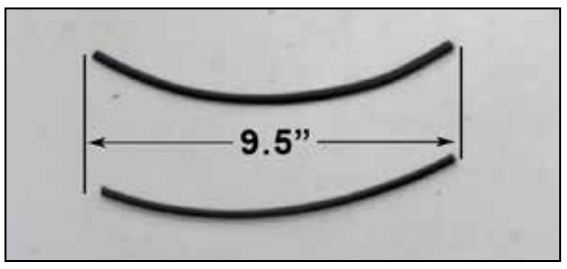

7. Cut the provided edge trim into two sections 9.5” long.

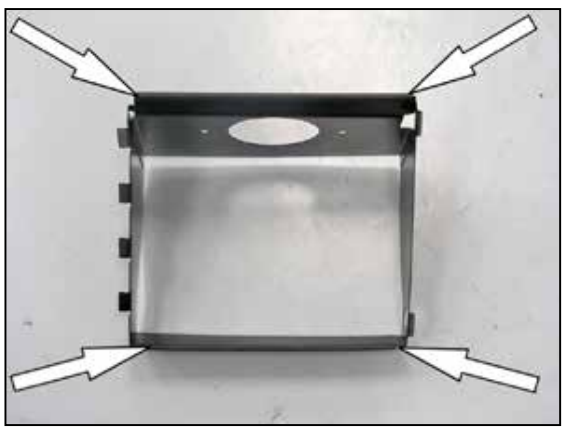

8. Install the small edge trim onto the heat shield as shown using the provided super glue to secure.



9. Install the large edge trim onto the top of the heat shield as shown.
NOTE: Some trimming of the edge trim will be necessary.

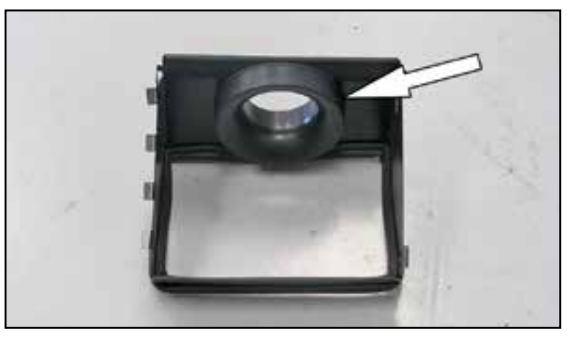

10. Install the provided filter adapter into the heat shield and secure with the provided hardware.



11. Install the K&N® air filter onto the filter adapter and secure with the provided hose clamp.
NOTE: Drycharger® air filter wrap; part # RC-5173DK is available to purchase separately. To learn more about Drycharger® filter wraps or look up color availability please visit http://www.knfilters.com®.



12. Install the heat shield/filter assembly onto the lower air filter housing and secure with the factory retaining clips.



13. Install the provided coupling hose (08699) onto the filter adapter and secure with the provided hose clamp.



14. Install the provided coupling hose (08761) onto the driver’s side turbo inlet tube and secure with the provided hose clamp.



15. Install the provided coupling hose (087121) onto the passenger side turbo inlet tube and secure with the provided hose clamp.



16. Install the provided grommet into the K&N® intake tube as shown.
NOTE: On vehicles that are not equipped with an inlet temperature sensor, install the provided plug into the intake tube.



17. On vehicles equipped with an inlet temperature sensor, unlock the inlet air temperature sensor and rotate it counter clockwise, remove the sensor from the factory air filter housing.
NOTE: The inlet air temperature sensor is very fragile, be careful while removing the sensor so as not to break it.



18. On vehicles equipped with an inlet temperature sensor, remove the O-Ring from the inlet air temperature sensor and then install it into the grommet installed into the K&N® intake tube. .
NOTE: The inlet air temperature sensor is very fragile, be careful while installing the sensor so as not to break it.



19. Install the K&N® intake tube into the turbo inlet hoses and then into the hose at the throttle body, adjust the tube for best fit and then secure with the provided hose clamps.



20. On vehicles equipped with an inlet temperature sensor, reconnect the inlet air temperature sensor electrical connection.



21. Reconnect the vehicle’s negative battery cable. Double check to make sure everything is tight and properly positioned before starting the vehicle.

22. It will be necessary for all K&N® high flow intake systems to be checked periodically for realignment, clearance and tightening of all connections. Failure to follow the above instructions or proper maintenance may void warranty.

ROAD TESTING:

1. Start the engine with the transmission in neutral or park, and the parking brake engaged. Listen for air leaks or odd noises. For air leaks secure hoses and connections. For odd noises, find cause and repair before proceeding. This kit will function identically to the factory system except for being louder and much more responsive.

2. Test drive the vehicle. Listen for odd noises or rattles and fix as necessary.

3. If road test is fine, you can now enjoy the added power and performance from your kit.

4. K&N Engineering, Inc., requires cleaning the intake system’s air filter element every 100,000 miles. When used in dusty or off-road environments, our filters will require cleaning more often. We recommend that you visually inspect your filter once every 25,000 miles to determine if the screen is still visible. When the screen is no longer visible some place on the filter element, it is time to clean it. To clean and re-oil, purchase our filter Recharger® service kit, part number 99-5050 or 99-5000 and follow the easy instructions.

NOT LEGAL FOR SALE OR USE ON ANY POLLUTION CONTROLLED MOTOR VEHICLE IN CALIFORNIA OR STATES ADOPTING CALIFORNIA EMISSION PROCEDURES.

See knfilters.com for CARB status on each part for a specific vehicle

trailfortress.com/k-n-performance-air-intake-system-63-2592