TRAIL FORTRESS

BUILT FOR THE TRAIL. CHECKED FOR YOUR TRUCK.

K&N 63-2591 Installation Instructions

63 Series Intake for Ford F-150 (2015-2020)

Part number: 63-2591

trailfortress.com/k-n-performance-air-intake-system-63-2591

Scan for fitment, price and install help

INSTALLATION INSTRUCTIONS

AIRCHARGER® HIGH-FLOW INTAKE SYSTEMS

Not legal for sale or use in California on any pollution controlled motor vehicle.

63-2591
FORD
2015-20 F150
V8-5.0L

NOTE: This kit was not designed to fit vehicles with a body lift.

TOOLS NEEDED:

Flat Blade Screw Driver
4mm Allen
3/4” Wrench
5/8” Wrench

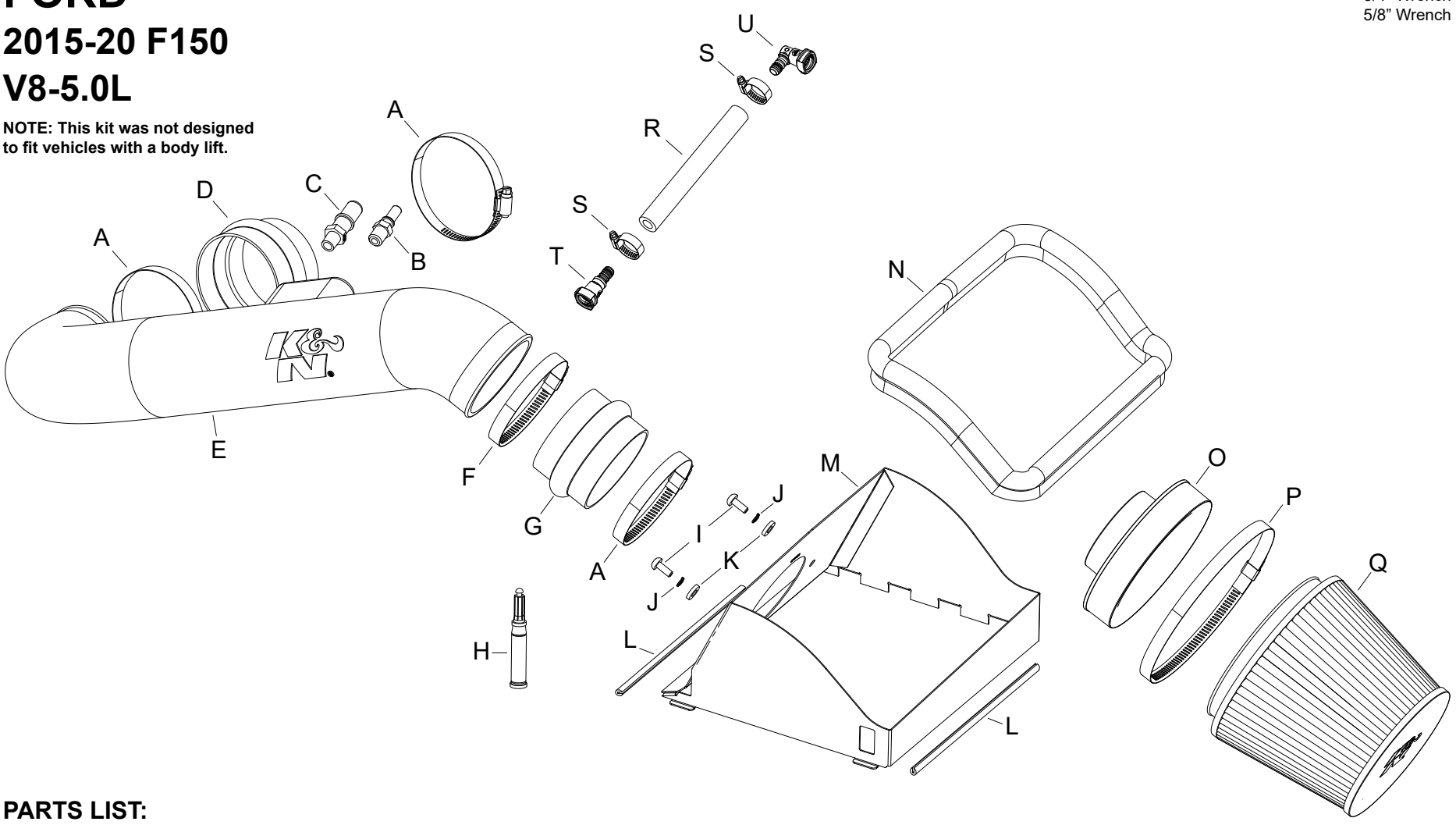

PARTS LIST:

	Description	Qty.	Part #		Description	Qty.	Part #		Description	Qty.	Part #
A	HOSE CLAMP #56	3	08620	H	SUPER GLUE, 3G DRIP PROOF	1	409	O	ADAPTER; UNIVERSAL, 6" 3.5"	1	21512-1
B	VENT; STRT, 1/4NPT TO QUICK	1	82630	I	BOLT; M6 X 1 X 16MM, BTNHD	2	07730	P	HOSE CLAMP #104	1	08697
C	VENT; 1/4" NPT TO QUICK	1	082628	J	WASHER; M6 SPLIT LOCK ZINC	2	1-3025	Q	AIR FILTER	1	RU-5173
D	HOSE; HUMP 3.5”ID TO 2.5”L	1	08699	K	WASHER; 6MM FLAT	2	08269	R	HOSE; 5/8”ID X 9”L	1	08691
E	INTAKE TUBE; (KB)	1	087296A	L	EDGE TRIM; (19"L)	1	102451	S	HOSE CLAMP #10 MINI	2	08411
F	HOSE CLAMP #60	1	08624	M	HEAT SHIELD	1	073182A	T	VENT; STRT QUICK DISC.	1	08526
G	HOSE; HUMP 3.5”ID X 3.75”	1	08639	N	EDGE TRIM; (39"L)	1	102496	U	FITTING; ELBOW, 90º	1	AIR-KITFITTING33

If you need any assistance please call 1-800-858-3333 to speak with a representative in our Customer Service Center before returning the product.

NOTE: FAILURE TO FOLLOW INSTALLATION INSTRUCTIONS AND NOT USING THE PROVIDED HARDWARE MAY DAMAGE THE INTAKE TUBE, THROTTLE BODY AND ENGINE.

TO START:

1. Turn off the ignition and disconnect the negative battery cable.
NOTE: Disconnecting the negative battery cable erases pre-programmed electronic memories. Write down all memory settings before disconnecting the negative battery cable. Some radios will require an anti-theft code to be entered after the battery is reconnected. The anti-theft code is typically supplied with your owner’s manual. In the event your vehicles anti-theft code cannot be recovered, contact an authorized dealership to obtain your vehicles anti-theft code.



2. Disconnect the EVAP vent connection and crank case vent connection.



3. Loosen the hose clamps at the throttle body and filter inlet that secure the factory intake tube.



4. Unhook the coolant line from the intake tube and then remove the intake tube from the vehicle.
NOTE: K&N Engineering, Inc., recommends that customers do not discard factory air intake.



5. Release the two clips securing the upper air filter housing and then remove the upper filter housing and stock air filter.



6. Install the filter adapter into the K&N® heat shield and secure with provided hardware.

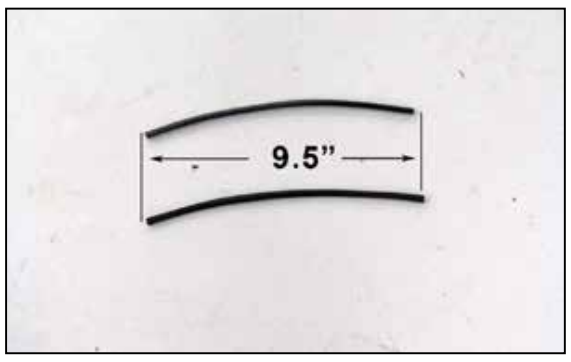

7. Cut the small edge trim into two lengths of 9.5” long.

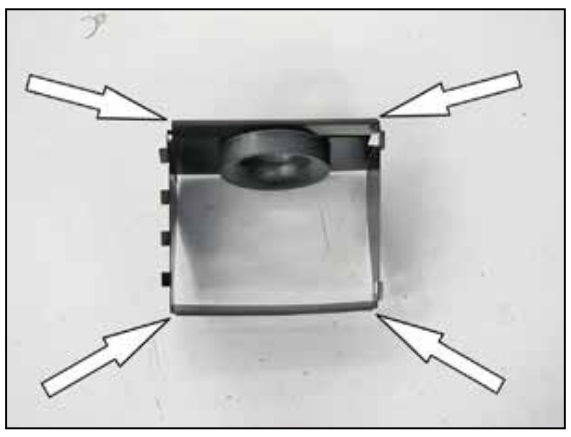

8. Install the two sections of edge trim onto the heat shield as shown. Use the provided super glue to secure the edge trim.



9. Install the provided large edge trim onto the top of the heat shield as shown.
NOTE: It will be necessary to trim the edge trim.



10. Install the air filter onto the filter adapter and secure with the provided hose clamp.



11. Install the filter/heat shield assembly onto the lower air filter housing and secure with the factory retaining clips.



12. Install the provided coupling hump hose (08639) onto the filter adapter and secure with the provided hose clamp.



13. Install the provided coupling hose (08699) onto the throttle body and secure with the provided hose clamp.



14. Install the two provided quick disconnect fittings into the K&N® intake tube as shown.
NOTE: NPT fittings are easy to cross thread. Install the vent fitting “hand” tight, then turn it two complete turns with a wrench.



15. Install the K&N® intake tube into the coupling hose at the filter adapter and then into the hose at the throttle body, adjust the tube for best fit and then secure with the provided hose clamps.

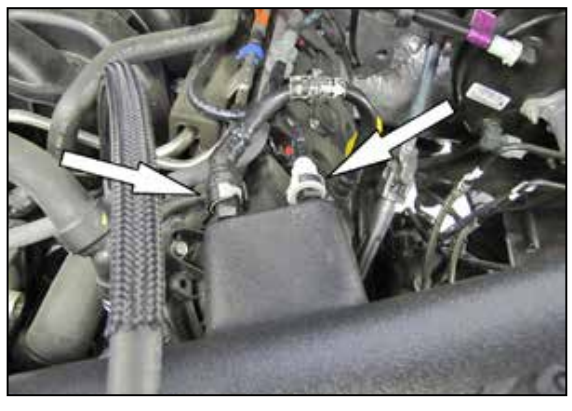

16. Connect the factory EVAP and Crank case vent lines to the fittings on the K&N® intake tube.
NOTE: It may be necessary to twist the plastic vent line at the fittings to line up the fittings in the intake tube.



16A. On some later models it may be necessary to assemble the crank case vent hose assembly with the provided parts and install due to the manufacturer changing the position on the valve cover port. Install the assembly with the 90° fitting attached to the valve cover port.



17. Reconnect the vehicle’s negative battery cable. Double check to make sure everything is tight and properly positioned before starting the vehicle.

18. It will be necessary for all K&N® high flow intake systems to be checked periodically for realignment, clearance and tightening of all connections. Failure to follow the above instructions or proper maintenance may void warranty.

ROAD TESTING:

1. Start the engine with the transmission in neutral or park, and the parking brake engaged. Listen for air leaks or odd noises. For air leaks secure hoses and connections. For odd noises, find cause and repair before proceeding. This kit will function identically to the factory system except for being louder and much more responsive.

2. Test drive the vehicle. Listen for odd noises or rattles and fix as necessary.

3. If road test is fine, you can now enjoy the added power and performance from your kit.

4. K&N Engineering, Inc., requires cleaning the intake system’s air filter element every 100,000 miles. When used in dusty or off-road environments, our filters will require cleaning more often. We recommend that you visually inspect your filter once every 25,000 miles to determine if the screen is still visible. When the screen is no longer visible some place on the filter element, it is time to clean it. To clean and re-oil, purchase our filter Recharger® service kit, part number 99-5050 or 99-5000 and follow the easy instructions.

trailfortress.com/k-n-performance-air-intake-system-63-2591