TRAIL FORTRESS

BUILT FOR THE TRAIL. CHECKED FOR YOUR TRUCK.

K&N 63-1597 Installation Instructions

Cold Air Intake for Jeep Wrangler Hybrid (2025)

Part number: 63-1597

trailfortress.com/k-n-performance-air-intake-system-63-1597

Scan for fitment, price and install help

AIRCHARGER® HIGH-FLOW INTAKE SYSTEMS

INSTALLATION INSTRUCTIONS

Not legal for sale or use in California on any pollution controlled motor vehicle.

63-1597
JEEP
2024-25 Wrangler JL 4XE
L4-2.0L Turbo (HYBRID)

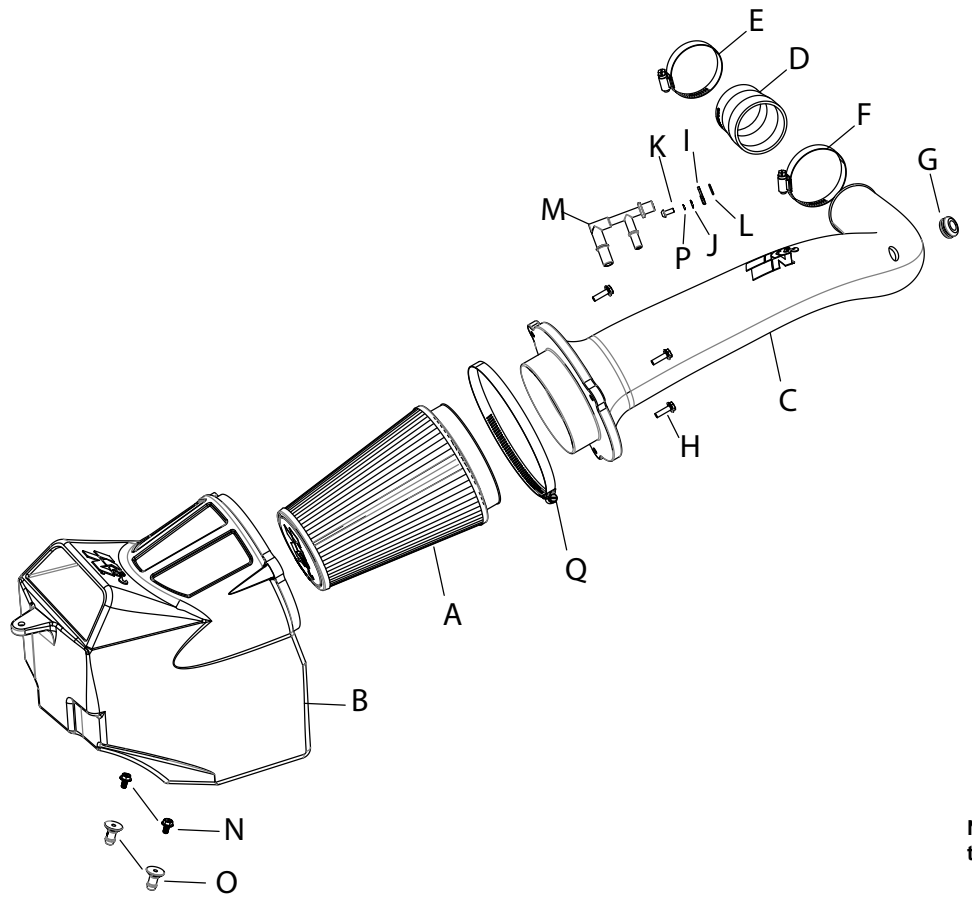

TOOLS NEEDED:

flat blade screw driver
ratchet
extension
10mm socket
4mm allen key
t20 torx
t30 torx

NOTE: This kit was not designed to fit vehicles with a body lift.

PARTS LIST:

	Description	Qty.	Part #		Description	Qty.	Part #		Description	Qty.	Part #
A	AIR FILTER	1	RU-2815	G	GROMMET	1	08064	M	VENT; EJECTOR "F", CCV	1	08528
B	AIR BOX	1	087385-1	H	BOLT; M6-1 X 20, HEX/FLANGE	3	1-2038	N	BOLT; M6-1 X 12, HEX/FLANGE	2	1-2110
C	TUBE	1	087594	I	BRACKET; VENT HOLD DOWN	1	064360	O	MOUNT; PLASTIC NYLON	2	8-186-1
D	HOSE; 2.25” ID TO 2.5” ID	1	08638	J	WASHER; 5MM FLAT	1	08212	P	WASHER; 5MM STAR CUT	1	07724
E	HOSE CLAMP #36	1	08530	K	BOLT; M5 X .8 X 12MM BTNHD	1	07734	Q	HOSE CLAMP #88	1	KITHS88
F	HOSE CLAMP #40	1	08554	L	O-RING; #013 (326)	1	KITORING013				

If you need any assistance please call 1-800-858-3333 to speak with a representative in our Customer Service Center before returning the product.

NOTE: FAILURE TO FOLLOW INSTALLATION INSTRUCTIONS AND NOT USING THE PROVIDED HARDWARE MAY DAMAGE THE INTAKE TUBE, THROTTLE BODY AND ENGINE.

TO START:

1. Turn off the ignition and disconnect the negative battery cable.
NOTE: Disconnecting the negative battery cable erases pre-programmed electronic memories. Write down all memory settings before disconnecting the negative battery cable. Some radios will require an anti-theft code to be entered after the battery is reconnected. The anti-theft code is typically supplied with your owner’s manual. In the event your vehicles anti-theft code cannot be recovered, contact an authorized dealership to obtain your vehicles anti-theft code.



2. Disconnect the inlet air temperature sensor electrical connection and unhook the wiring harness from the intake tube.

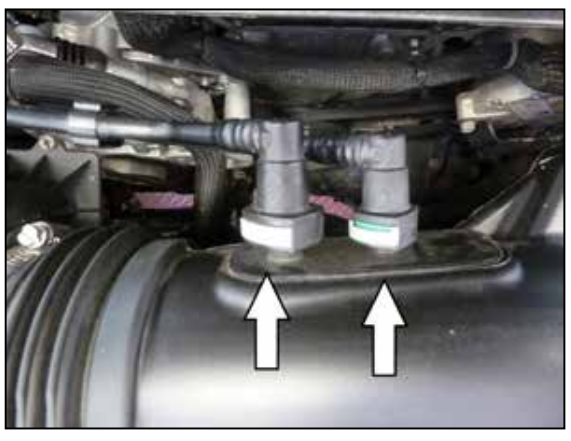

3. Depress the locking tab and disconnect the two vent lines from the air filter housing.



4. Remove the two bolts that secure the intake tube to the core support. Loosen the hose clamp securing the intake tube to the throttle body.



5. Remove the bolt that secures the fresh air duct to the fender. Remove the complete intake system from the vehicle.
NOTE: K&N Engineering, Inc., recommends that customers do not discard factory air intake.



6. Remove the six retaining clips that secure the grill assembly to the core support. Remove the grill assembly.



7. Remove the two bolts securing the diagonal core support brace and remove the brace.
NOTE: This brace will be reinstalled.



8. Remove the two bolts that secure the fresh air duct to the core support and then remove the duct from the vehicle.



9. Reinstall the core support diagonal brace using the factory hardware.

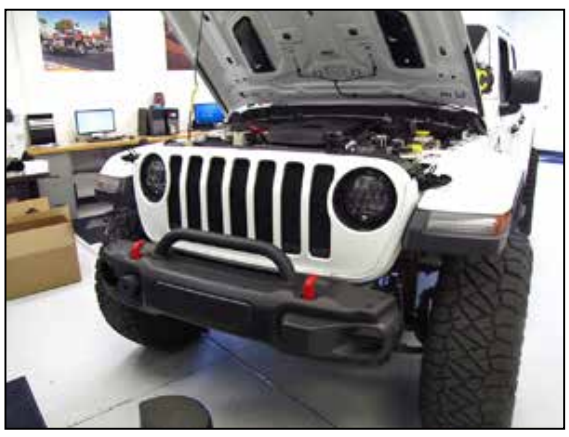

10. Reinstall the grill and secure with the factory retaining clips.



11. Install the provided mounting post onto the K&N® air filter housing using the provided hardware.



12. Install the O-ring onto the ejector fitting provided and then install the fitting into the K&N® intake tube. Secure the fitting with the clip and hardware provided.



13. Remove the inlet air temperature sensor from the factory intake tube. Remove the O-ring from the sensor and then install the sensor into the K&N® intake tube using the provided grommet.



14. Install the air filter onto the end of the K&N® intake tube and secure with the provided hose clamp.



15. Install the intake tube assembly into the K&N® air filter housing and secure with the provided hardware.



16. Install the provided step coupler onto the K&N intake tube and secure with the provided hose clamp.



17. Install the intake assembly into the vehicle so the mounting studs insert into the mounting grommets and the intake tube inserts into the coupler. Secure the system with the provided hose clamp and hardware.



18. Connect the CCV lines to the ejector fitting installed into the intake tube.



19. Reconnect the AIT sensor electrical connection.



20. Reconnect the vehicle's negative battery cable. Double check to make sure everything is tight and properly positioned before starting the vehicle.

21. It will be necessary for all K&N® high flow intake systems to be checked periodically for realignment, clearance and tightening of all connections. Failure to follow the above instructions or proper maintenance may void warranty.

ROAD TESTING:

1. Start the engine with the transmission in neutral or park, and the parking brake engaged. Listen for air leaks or odd noises. For air leaks secure hoses and connections. For odd noises, find cause and repair before proceeding. This kit will function identically to the factory system except for being louder and much more responsive.

2. Test drive the vehicle. Listen for odd noises or rattles and fix as necessary.

3. If road test is fine, you can now enjoy the added power and performance from your kit.

4. K&N Engineering, Inc., requires cleaning the intake system's air filter element every 100,000 miles. When used in dusty or off-road environments, our filters will require cleaning more often. We recommend that you visually inspect your filter once every 25,000 miles to determine if the screen is still visible. When the screen is no longer visible some place on the filter element, it is time to clean it. To clean and re-oil, purchase our filter Recharger® service kit, part number 99-5050 or 99-5000 and follow the easy instructions.

trailfortress.com/k-n-performance-air-intake-system-63-1597