TRAIL FORTRESS

BUILT FOR THE TRAIL. CHECKED FOR YOUR TRUCK.

K&N 63-1594 Installation Instructions

Cold Air Intake for Ram 1500 (2020-2026)

Part number: 63-1594

trailfortress.com/k-n-performance-air-intake-system-63-1594

Scan for fitment, price and install help

AIRCHARGER® HIGH-FLOW INTAKE KITS

NOT LEGAL FOR SALE OR USE ON ANY POLLUTION CONTROLLED MOTOR VEHICLE IN CALIFORNIA OR STATES ADOPTING CALIFORNIA EMISSION PROCEDURES.
See knfilters.com for CARB status on each part for a specific vehicle

INSTALLATION INSTRUCTIONS

63-1594
RAM
2020-24 1500
3.6L V6

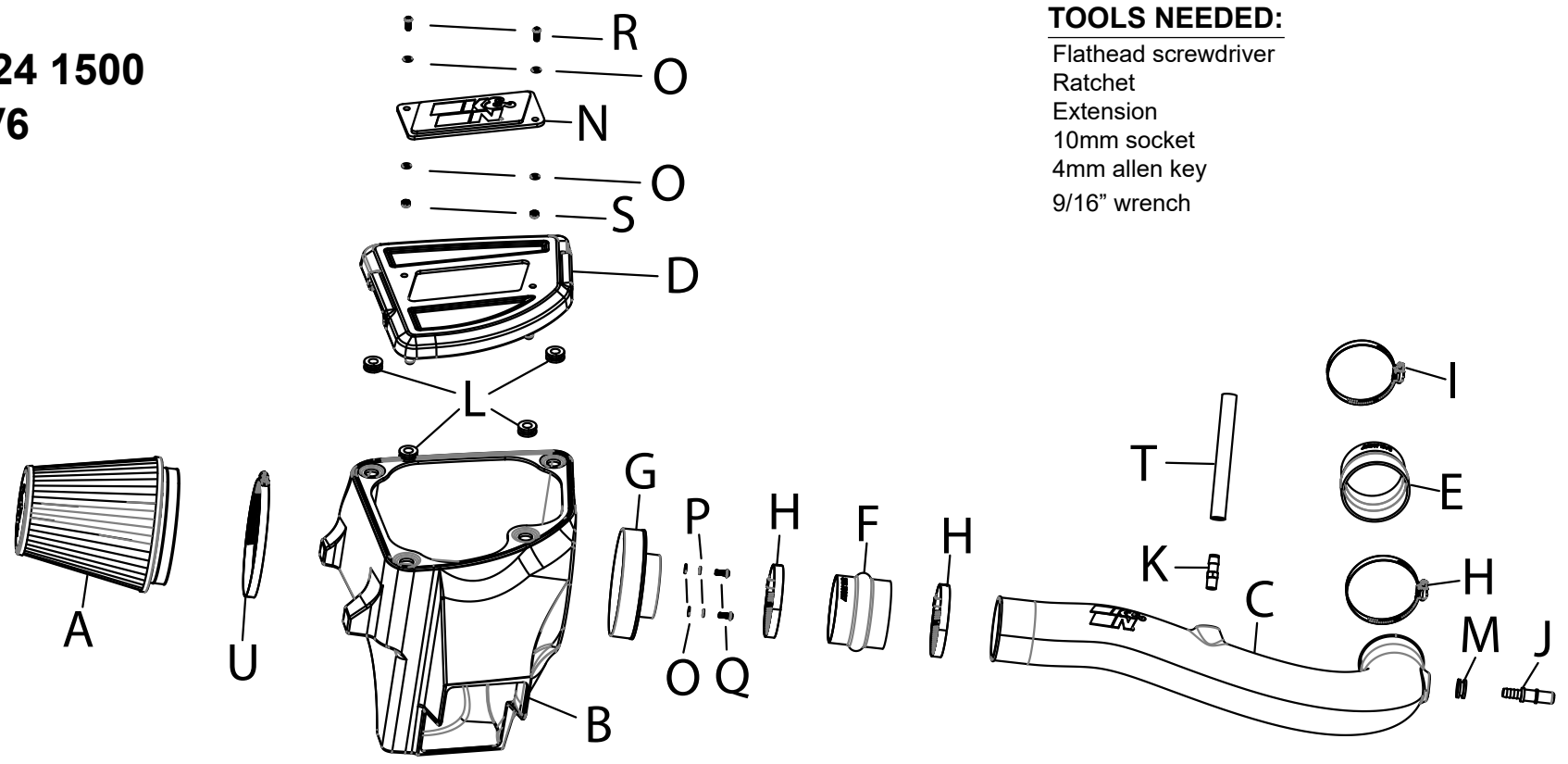

TOOLS NEEDED:

Flathead screwdriver
Ratchet
Extension
10mm socket
4mm allen key
9/16” wrench

PARTS LIST:

	Description	Qty.	Part #		Description	Qty.	Part #		Description	Qty.	Part #
A	AIR FILTER	1	RU-1041	H	HOSE CLAMP #56	3	08620	O	WASHER; SMALL	6	08269
B	AIRBOX	1	087574	I	HOSE CLAMP #52	1	08610	P	WASHER; SPLIT LOCK	2	1-3025
C	TUBE	1	087583	J	QUICK CONNECT 5/8” OD	1	82629	Q	BUTTONHEAD SS M6 X 16MM	2	07730
D	LID	1	087582	K	VENT; 1/2” PLASTIC	1	080022	R	BUTTONHEAD SS M6 X 20MM	2	KIT20BHC3060
E	HOSE; STEP 3.5” X 3.25”	1	08496	L	GROMMET; 1/2”ID	4	08064	S	NUT; NYLOCK	2	07512
F	HOSE; HUMP 3.5” X 3L”	1	5-1074	M	GROMMET; 9/16’ ID	1	KITGRMT02	T	HOSE; 1/2” X 7”L	1	08159
G	ADAPTOR; FILTER	1	21512-1	N	CLEAR K&N BADGE	1	088114	U	HOSE CLAMP #104	1	08697

If you need any assistance please call 1-800-858-3333 to speak with a representative in our Customer Service Center before returning the product.

NOTE: FAILURE TO FOLLOW INSTALLATION INSTRUCTIONS AND NOT USING THE PROVIDED HARDWARE MAY DAMAGE THE INTAKE TUBE, THROTTLE BODY AND ENGINE.

TO START:

1. Turn off the ignition and disconnect the negative battery cable.
NOTE: Disconnecting the negative battery cable erases pre-programmed electronic memories. Write down all memory settings before disconnecting the negative battery cable. Some radios will require an anti-theft code to be entered after the battery is reconnected. The anti-theft code is typically supplied with your owner’s manual. In the event your vehicles anti-theft code cannot be recovered, contact an authorized dealership to obtain your vehicles anti-theft code.



2. Loosen the hose clamp that secures the factory intake tube to the throttle body. Disconnect the IAT sensor electrical connection.



3. Disconnect the CCV hose quick connect fitting.



4. Loosen the hose clamp that secures the factory intake tube to the air filter housing and then remove the nut that secures the intake plenum to the intake manifold. Remove the intake plenum assembly from the vehicle.



5. Lift the air filter housing assembly up and remove it from the vehicle.



6. Install the provided radiused filter adapter into the K&N air filter housing and secure with the provided hardware.

Continued INSTALLATION INSTRUCTIONS



7. Remove the four mounting grommets from the factory air filter housing and then install them into the K&N air filter housing.



8. Set the K&N air filter housing into the vehicle so the factory mounting pins insert into the mounting grommets installed into the K&N filter housing.



9. Install the K&N air filter onto the adapter and secure with the provided hose clamp. Install the four provided grommets into the air filter housing.



10. Install the K&N clear logo plate into the K&N filter housing lid and secure with the provided hardware.

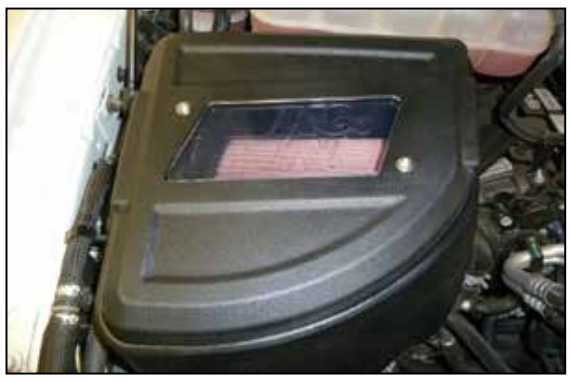

11. Install the Lid onto the filter housing so the mounting pins insert into the grommets.



12. Install the provided hump coupler onto the filter adapter and secure with the provided hose clamp.



13. Install the provided step coupler onto the throttle body and secure with the provided hose clamp.



14. Install the provided vent fitting into the K&N intake tube.



15. Remove the IAT sensor from the factory plenum, remove the O-ring from the sensor and then install the sensor into the K&N intake tube using the provided grommet.



16. Install the K&N intake tube assembly into the couplers, align for best fit and then secure with the provided hose clamp.



17. Reconnect the IAT sensor electrical connection.



18. Install the provided CCV hose and quick connect fitting as shown



19. Reconnect the vehicle's negative battery cable. Double check to make sure everything is tight and properly positioned before starting the vehicle.

20. It will be necessary for all K&N® high flow intake systems to be checked periodically for realignment, clearance and tightening of all connections. Failure to follow the above instructions or proper maintenance may void warranty.

ROAD TESTING:

1. Start the engine with the transmission in neutral or park, and the parking brake engaged. Listen for air leaks or odd noises. For air leaks secure hoses and connections. For odd noises, find cause and repair before proceeding. This kit will function identically to the factory system except for being louder and much more responsive.

2. Test drive the vehicle. Listen for odd noises or rattles and fix as necessary.

3. If road test is fine, you can now enjoy the added power and performance from your kit.

4. K&N Engineering, Inc., requires cleaning the intake system's air filter element every 100,000 miles. When used in dusty or off-road environments, our filters will require cleaning more often. We recommend that you visually inspect your filter once every 25,000 miles to determine if the screen is still visible. When the screen is no longer visible some place on the filter element, it is time to clean it. To clean and re-oil, purchase our filter Recharger® service kit, part number 99-5050 or 99-5000 and follow the easy instructions.

NOT LEGAL FOR SALE OR USE ON ANY POLLUTION CONTROLLED MOTOR VEHICLE IN CALIFORNIA OR STATES ADOPTING CALIFORNIA EMISSION PROCEDURES.

See knfilters.com for CARB status on each part for a specific vehicle

trailfortress.com/k-n-performance-air-intake-system-63-1594