K&N 63-1591 Installation Instructions

Cold Air Intake for Ram 1500 (2021-2024)

Part number: 63-1591

trailfortress.com/k-n-performance-air-intake-system-63-1591

Scan for fitment, price and install help

AIRCHARGER® HIGH-FLOW INTAKE KITS

NOT LEGAL FOR SALE OR USE ON ANY POLLUTION CONTROLLED MOTOR VEHICLE IN CALIFORNIA OR STATES ADOPTING CALIFORNIA EMISSION PROCEDURES.
See knfilters.com for CARB status on each part for a specific vehicle

INSTALLATION INSTRUCTIONS

63-1591
RAM
2021-24 1500 TRX
V8-6.2L

NOTE: This kit was not designed to fit vehicles with a body lift.

TOOLS NEEDED:

- Ratchet
- Extension
- 8mm Socket
- 10mm Socket
- 13mm Socket
- Pliers
- Panel Removal Tool
- Heat Gun
- Flat Head Screw Driver
- 10mm Wrench

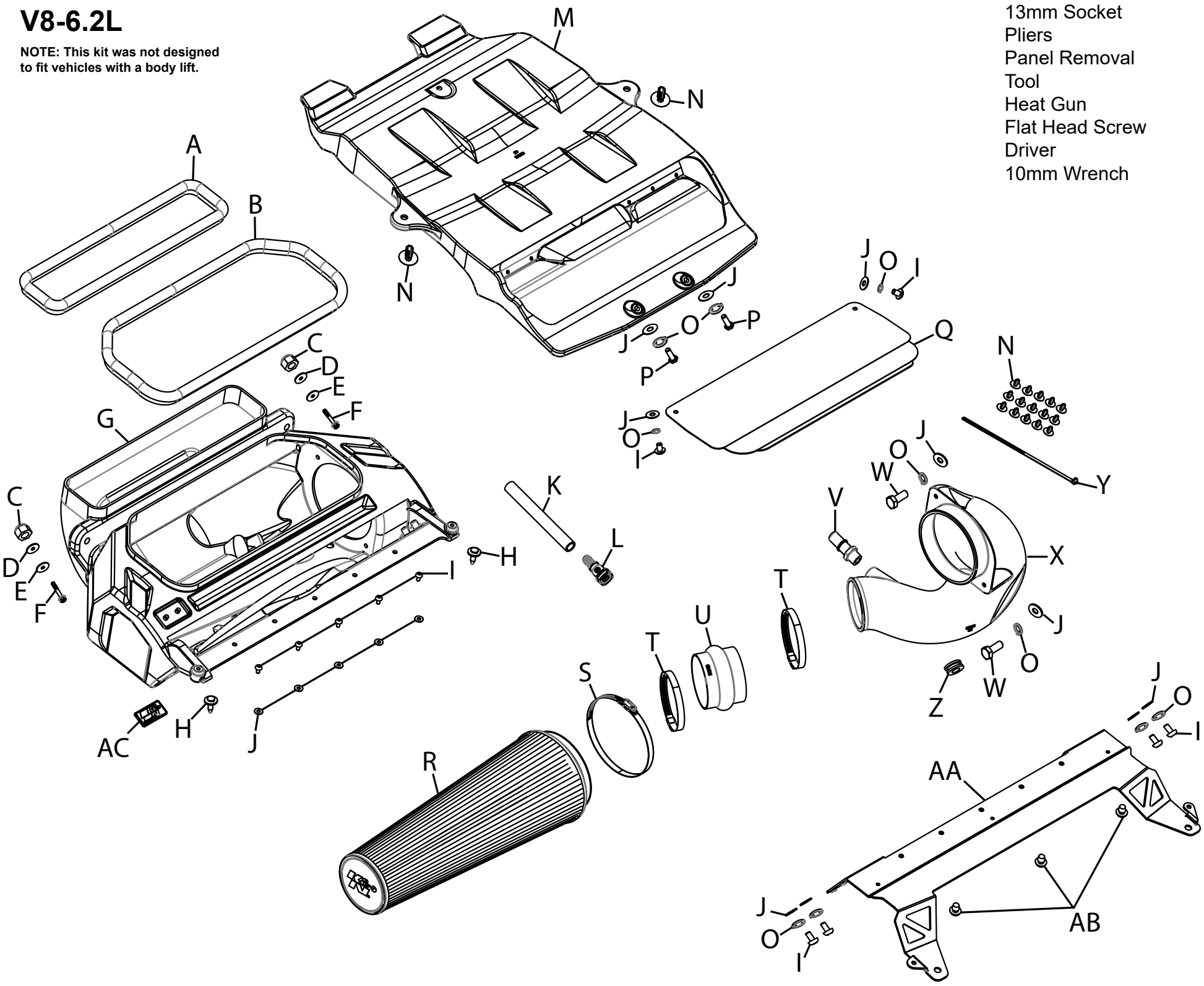

PARTS LIST:

	Description	Qty.	Part #		Description	Qty.	Part #		Description	Qty.	Part #
A	EDGE TRIM; (45”L)	1	102463	K	HOSE; 5/8”ID X 7.5”L	1	084008	U	HOSE; HUMP 4”ID X 3”L	1	08418
B	EDGE TRIM; (52”L)	1	102511	L	VENT; 16-14MM PCV	1	08526	V	FITTING; 3/8NPT TO .620” QC.	1	82637
C	NUT; 6MM NYLOCK, HEXHD	2	07512	M	AIR DUCT; FRESH (QJ)	1	087542	W	BOLT, M6-1 X 16MM, HEX	2	07812
D	WASHER; 1”D X 1/4: HOSE	2	08160	N	CLIP; RETAINING, HOOD INST.	17	080605	X	TUBE; (QH)	1	087540
E	WASHER; 1” X .300 X .063 RUBBER	2	21685	O	WASHER; M6, SPLIT LOCK	10	1-3025	Y	CABLE TIES; 11” BLK	1	21590
F	BOLT; M6-1 X 40, HEX/FLANGE	2	1-2075	P	BOLT; M6-1.00 X 25MM	2	07858	Z	GROMMET; 1/2”ID, .75GD	1	AIR-KITGRMT03
G	FILTER HOUSING; (QI)	1	087541	Q	BLOCK OFF; FRESH AIR	1	074565	AA	BRACKET; AIRBOX MOUNT	1	064374
H	CLIP; RETAINER BODY NYLON	2	AIR-KITRETCLIP02	R	AIR FILTER	1	RU-5295	AB	PLUG; RUBBER, RX TOPS	3	08162
I	BOLT; M6-1 X 12MM, BTNHD	11	07794	S	HOSE CLAMP; #104	1	08697	AC	BADGE; PLASTIC SNAP-IN	1	088096
J	WASHER; 6MM FLAT	15	08269	T	HOSE CLAMP; #64	2	08645				

If you need any assistance please call 1-800-858-3333 to speak with a representative in our Customer Service Center before returning the product.

NOTE: FAILURE TO FOLLOW INSTALLATION INSTRUCTIONS AND NOT USING THE PROVIDED HARDWARE MAY DAMAGE THE INTAKE TUBE, THROTTLE BODY AND ENGINE.

trailfortress.com/k-n-performance-air-intake-system-63-1591

TO START:

1. Turn off the ignition and disconnect the negative battery cable.
NOTE: Disconnecting the negative battery cable erases pre-programmed electronic memories. Write down all memory settings before disconnecting the negative battery cable. Some radios will require an anti-theft code to be entered after the battery is reconnected. The anti-theft code is typically supplied with your owner's manual. In the event your vehicles anti-theft code cannot be recovered, contact an authorized dealership to obtain your vehicles anti-theft code.



2. Unsnap the air filter housing cover and lift off.





3. Remove the plastic fasteners from the upper valence and then remove the valence from the vehicle.



4. Remove the two front air filter housing mounting bolts. **NOTE: These bolts will be reused.**



5. Loosen the hose clamp that secures the intake hose to the air filter housing.



6. Loosen the ten screws that secure the upper air filter housing to the lower air filter housing and then remove the upper housing. Remove the air filters from the lower housing.



7. Remove the three bolts shown that secure the air filter housing mounting bracket to the passenger side inner fender.



8. Remove the three bolts shown that secure the air filter housing mounting bracket to the driver side inner fender.



9. Remove the lower air filter housing and mounting bracket as an assembly.



10. Disconnect the IAT sensor electrical connection.



11. Loosen the hose clamp that secures the intake tube to the throttle body.



12. Disconnect the CCV switch electrical connection. Remove the mounting bolts that secure the CCV switch to the valve cover.



13. Disconnect the CCV line from the CCV switch at the quick connector.



14. Remove the intake tube with the CCV switch and hose assembly from the vehicle.



15. Using a heat gun or hair dryer, warm the connection of the CCV pipe to the CCV switch and then separate the pipe from the switch.



16. Reinstall the CCV switch onto the valve cover and secure with the factory bolts. Reconnect the CCV hose quick connector and connect the electrical connection.



17. Remove the bolts that secure the air filter housing support bracket to the housing and set the support bracket aside.





18. Cut the retaining clips that secure the left and right-side hood insulation panels. **NOTE: The clips will be destroyed during these process, new clips are provided to reinstall the insulation panels.**



19. Remove the four bolts that secure the front of the factory fresh air intake duct.

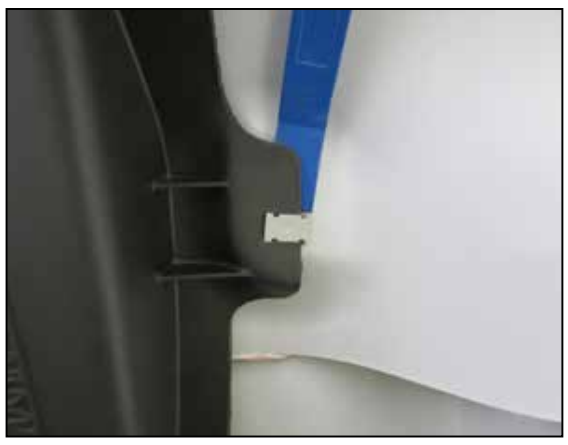

20. Using a panel popper tool or similar device, pry the clips that attach the fresh air duct to the hood to separate the duct from the hood. Remove the factory fresh air duct from the hood.



21. Remove the IAT sensor from the factory intake tube and install it into the K&N intake tube using the provided grommet. Install the provided quick connect fitting into the K&N intake tube as shown. **NOTES: The IAT sensor is fragile, use care when handling the sensor so as not to break it. The quick connect fitting npt tapered threads and will not tighten all the way down.**



22. Install the provided coupler onto the throttle body and secure with the provided hose clamp.



23. Assemble the provided CCV hose and quick connect fitting. Install the assembled CCV hose onto the CCV switch as shown.



24. Install the K&N intake tube into the coupler at the throttle body but do not tighten the hose clamp to secure the tube.



25. Connect the CCV quick connect fitting to the fitting installed into the K&N intake tube.



26. Secure the factory air filter housing support bracket to the K&N air filter housing using the provided hardware. Install the K&N logo into the filter housing.



27. Install the provided edge trim onto the K&N air filter housing.



28. Install the three rubber bumpers into the support bracket as shown.



29. Secure the support bracket to the K&N air filter housing with the provided hardware.



30. Secure the top side of the filter housing to the support bracket with the provided hardware.



31. Set the air filter housing assembly into the vehicle.





32. Position the intake tube into the air filter housing and then secure the tube to the housing with the provided hardware.





33. Secure the front air filter housing mounting bracket to the core support using the factory air filter housing mounting bolts.





34. Secure the air filter support bracket onto the inner fenders using the factory hardware.



35. Tighten the hose clamp that secures the K&N intake tube to the coupler at the throttle body.



36. Reconnect the IAT sensor electrical connection.



37. Install the K&N air filter into the housing and onto the intake tube, then secure with provided hose clamp.



38. Reinstall the upper valence and secure with the factory retaining clips.





39. Install two provided retaining clips into the front into the front of the air filter housing through the valence.



40. Unclip the wiring harness from the under side of the hood where shown.



41. Using the provided tie wrap, secure the harness to the hood as shown.



42. Feed two of provided retaining clips into the K&N fresh air duct as shown.



43. Install the tabs at the rear of the K&N fresh air duct onto the slots of the hood.





44. Rotate the fresh air duct up and align the mounting clips previously installed to the mounting holes in the hood.



45. Snap the retaining clips into the hood and then secure the front of the duct to the hood with the hardware provided.



46. Reinstall the under hood insulation and secure with the provided retaining clips.





47. During severe inclement weather such as heavy rain or snow, K&N recommends install the provided forward fresh air block off plate using the provided hardware.



48. Reconnect the vehicle's negative battery cable. Double check to make sure everything is tight and properly positioned before starting the vehicle.

49. It will be necessary for all K&N® high flow intake systems to be checked periodically for realignment, clearance and tightening of all connections. Failure to follow the above instructions or proper maintenance may void warranty.

ROAD TESTING:

1. Start the engine with the transmission in neutral or park, and the parking brake engaged. Listen for air leaks or odd noises. For air leaks secure hoses and connections. For odd noises, find cause and repair before proceeding. This kit will function identically to the factory system except for being louder and much more responsive.

2. Test drive the vehicle. Listen for odd noises or rattles and fix as necessary.

3. If road test is fine, you can now enjoy the added power and performance from your kit.

4. K&N Engineering, Inc., requires cleaning the intake system's air filter element every 100,000 miles. When used in dusty or off-road environments, our filters will require cleaning more often. We recommend that you visually inspect your filter once every 25,000 miles to determine if the screen is still visible. When the screen is no longer visible some place on the filter element, it is time to clean it. To clean and re-oil, purchase our filter Recharger® service kit, part number 99-5050 or 99-5000 and follow the easy instructions.

NOT LEGAL FOR SALE OR USE ON ANY POLLUTION CONTROLLED MOTOR VEHICLE IN CALIFORNIA OR STATES ADOPTING CALIFORNIA EMISSION PROCEDURES.

See knfilters.com for CARB status on each part for a specific vehicle

trailfortress.com/k-n-performance-air-intake-system-63-1591