TRAIL FORTRESS

BUILT FOR THE TRAIL. CHECKED FOR YOUR TRUCK.

# K&N 63-1588 Installation Instructions

Cold Air Intake for Jeep Wrangler (2021-2025)

Part number: 63-1588

trailfortress.com/k-n-performance-air-intake-system-63-1588

Scan for fitment, price and install help

# INSTALLATION INSTRUCTIONS

AIRCHARGER® HIGH-FLOW INTAKE SYSTEMS

Not legal for sale or use in California on any pollution controlled motor vehicle.

# 63-1588
# JEEP
## 2021-25 Wrangler
## V8-6.4L

**TOOLS NEEDED:**

Ratchet
Extension
8mm socket
10mm socket
pilers
Flat blade screw driver
¾" wrench

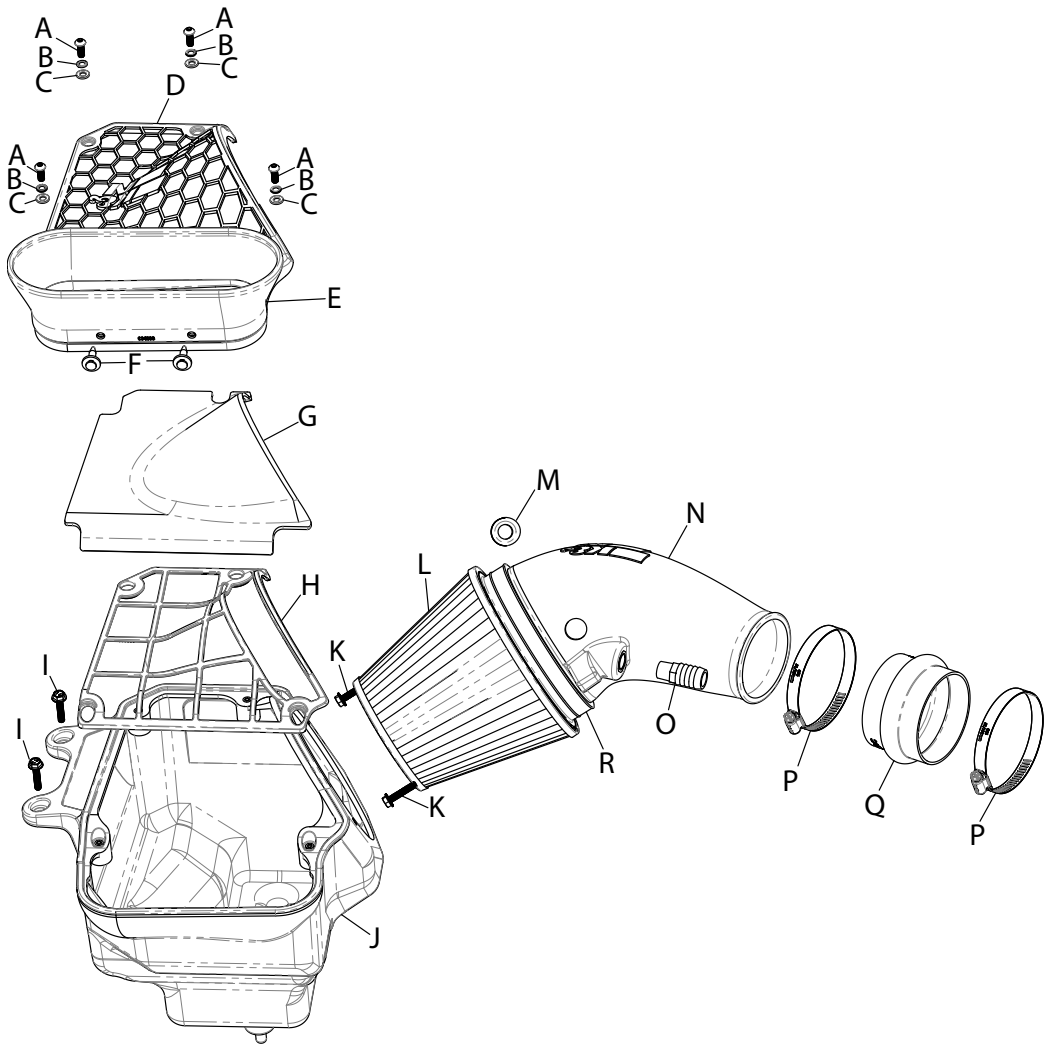


**PARTS LIST:**

| | Description | Qty. | Part # | | Description | Qty. | Part # | | Description | Qty. | Part # |
|---|---|---|---|---|---|---|---|---|---|---|---|
| A | BOLT; M6-1.00 X 25MM BTNHD | 4 | 07729 | G | INSERT; FOAM | 1 | 971974 | M | GROMMET; 9/16"ID - 1.125"OD | 1 | KITGRMT02 |
| B | WASHER; M6 SPLIT LOCK | 4 | 1-3025 | H | FRAME; PRECLEANER BTM | 1 | 088110 | N | INTAKE TUBE; (QG) | 1 | 087539 |
| C | WASHER; 6MM FLAT | 4 | 08269 | I | BOLT; M6-1 X 20 HEX | 2 | 1-2038 | O | FITTING; 3/8"NPT, 3/4" BARB | 1 | 080026 |
| D | FRAME; PRECLEANER TOP | 1 | 088109 | J | AIRBOX; (QF) | 1 | 087538 | P | HOSE CLAMP; #56 | 2 | 08620 |
| E | HOOD SEAL | 1 | 084133 | K | BOLT; M6-1 X 12, HEX/FLANGE | 2 | 1-2110 | Q | HOSE; HUMP 3.5"ID X 2.5"L | 1 | 08699 |
| F | CLIP; RETAINER BODY BLK | 2 | KITRETCLIP02 | L | AIR FILTER | 1 | RU-1042 | R | HOSE CLAMP; #104 | 1 | 08697 |

**If you need any assistance please call 1-800-858-3333 to speak with a representative in our Customer Service Center before returning the product.**

**NOTE: FAILURE TO FOLLOW INSTALLATION INSTRUCTIONS AND NOT USING THE PROVIDED HARDWARE MAY DAMAGE THE INTAKE TUBE, THROTTLE BODY AND ENGINE.**

### TO START:

1. Turn off the ignition and disconnect the negative battery cable.
**NOTE: Disconnecting the negative battery cable erases pre-programmed electronic memories. Write down all memory settings before disconnecting the negative battery cable. Some radios will require an anti-theft code to be entered after the battery is reconnected. The anti-theft code is typically supplied with your owner's manual. In the event your vehicles anti-theft code cannot be recovered, contact an authorized dealership to obtain your vehicles anti-theft code.**



2. Disconnect the IAT sensor electrical connection and unhook the wiring harness from the intake tube.



3. Remove the bolt that secures the factory air filter housing to the inner fender.



4. Loosen the hose clamp that secures the factory intake tube to the throttle body.



5. Release the spring clamp that secures the CCV hose to the factory air filter housing port and then disconnect the CCV hose from the port.



6. Remove the complete air filter housing from the vehicle.



7. Install the provided CCV fitting and IAT grommet into the K&N intake tube as shown.



8. Install the provided straight coupler onto the K&N intake tube and secure with the provided hose clamp.



9. Install the K&N intake tube into the K&N air filter housing and secure with the provided hardware.



10. Set the K&N intake system into position so the coupler engages the throttle body and the posts on the bottom of the filter housing engage the factory mounting grommets. Secure the filter housing to the inner fender with the provided hardware. Secure the coupler to the throttle body with the provided hose clamp.



11. Install the K&N air filter onto the intake tube and secure with the provided hose clamp.



12. Connect the factory CCV hose to the fitting installed into the K&N intake.



13. Remove the IAT sensor from the factory air filter housing, remove the O-ring from the sensor and then install it into the grommet installed into the K&N intake tube.



14. Reconnect the IAT electrical connection.



15. Assemble the pre-cleaner lid assembly.



16. Install the pre-cleaner lid assembly onto the K&N filter housing and secure with the provided hardware.



17. Install the fresh air intake seal onto the air filter housing and secure with the provided push pins.



19. Reconnect the vehicle's negative battery cable. Double check to make sure everything is tight and properly positioned before starting the vehicle.

20. It will be necessary for all K&N® high flow intake systems to be checked periodically for realignment, clearance and tightening of all connections. Failure to follow the above instructions or proper maintenance may void warranty.

## ROAD TESTING:

1. Start the engine with the transmission in neutral or park, and the parking brake engaged. Listen for air leaks or odd noises. For air leaks secure hoses and connections. For odd noises, find cause and repair before proceeding. This kit will function identically to the factory system except for being louder and much more responsive.

2. Test drive the vehicle. Listen for odd noises or rattles and fix as necessary.

3. If road test is fine, you can now enjoy the added power and performance from your kit.

4. K&N Engineering, Inc., requires cleaning the intake system's air filter element every 100,000 miles. When used in dusty or off-road environments, our filters will require cleaning more often. We recommend that you visually inspect your filter once every 25,000 miles to determine if the screen is still visible. When the screen is no longer visible some place on the filter element, it is time to clean it. To clean and re-oil, purchase our filter Recharger® service kit, part number 99-5050 or 99-5000 and follow the easy instructions.



trailfortress.com/k-n-performance-air-intake-system-63-1588