TRAIL FORTRESS

BUILT FOR THE TRAIL. CHECKED FOR YOUR TRUCK.

K&N 63-1586 Installation Instructions

Cold Air Intake for Ram 1500 (2020-2023)

Part number: 63-1586

trailfortress.com/k-n-performance-air-intake-system-63-1586

Scan for fitment, price and install help

AIRCHARGER® HIGH-FLOW INTAKE KITS

NOT LEGAL FOR SALE OR USE ON ANY POLLUTION CONTROLLED MOTOR VEHICLE IN CALIFORNIA OR STATES ADOPTING CALIFORNIA EMISSION PROCEDURES.
See knfilters.com for CARB status on each part for a specific vehicle

INSTALLATION INSTRUCTIONS

63-1586
RAM
2020-23 1500
V6-3.0L TURBO DIESEL

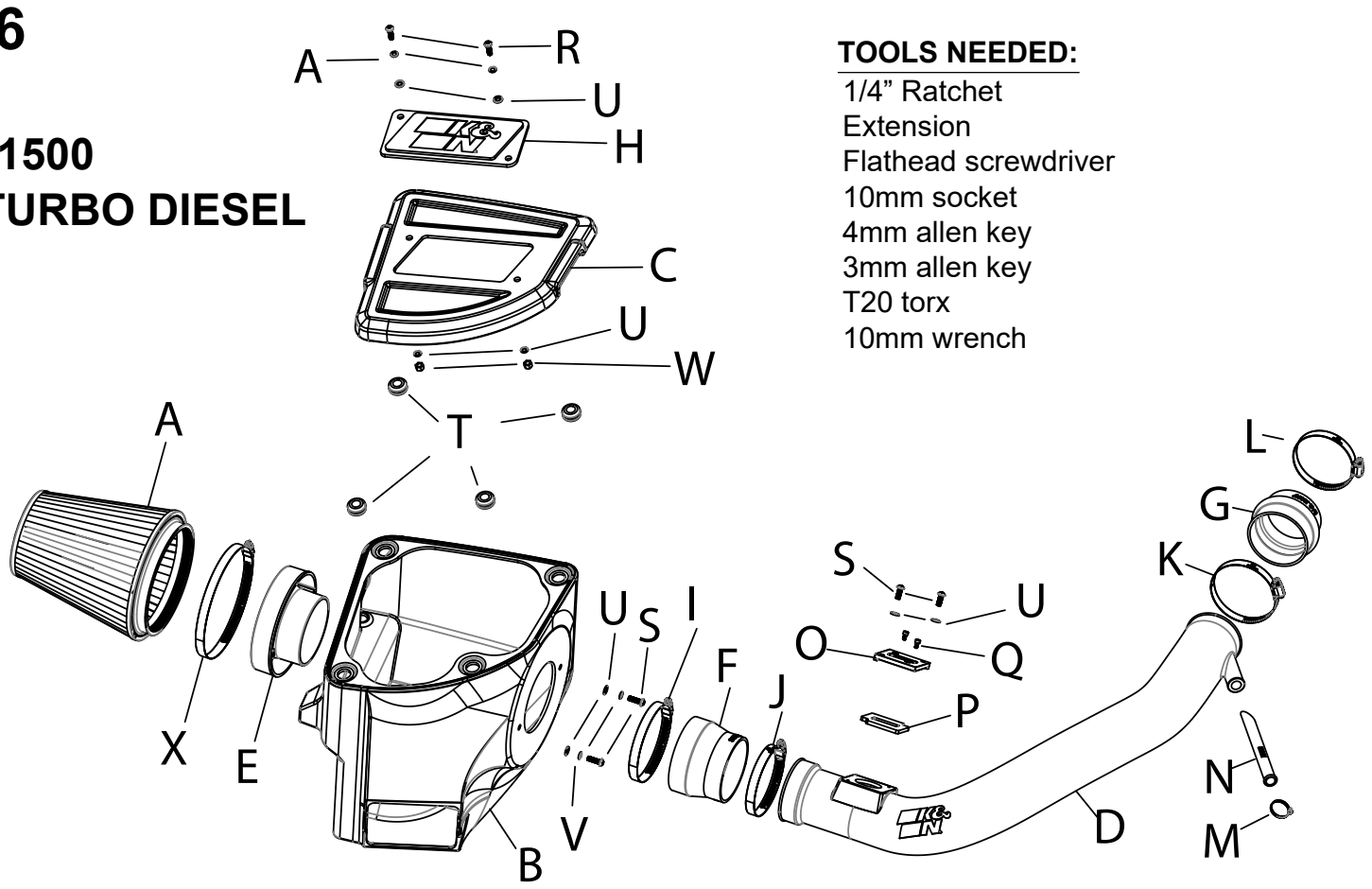

TOOLS NEEDED:
1/4” Ratchet
Extension
Flathead screwdriver
10mm socket
4mm allen key
3mm allen key
T20 torx
10mm wrench

PARTS LIST:

	Description	Qty.	Part #		Description	Qty.	Part #		Description	Qty.	Part #
A	AIR FILTER	1	RU-1044XD	I	HOSE CLAMP; #64	1	08645	Q	BOLT; M4-.7 X 8MM	2	07733
B	AIRBOX	1	087574	J	HOSE CLAMP; #56	1	08620	R	SCREW; M6 X 20MM	2	KIT20BHC3060
C	LID	1	087582	K	HOSE CLAMP; #52	1	08610	S	BOLT; M6 X 1 X 16MM	4	07730
D	TUBE	1	087573	L	HOSE CLAMP; #48	1	08601	T	GROMMET	4	08064
E	ADAPTOR; FILTER	1	27300	M	HOSE CLAMP; #10 MINI	1	08411	U	WASHER; 6MM FLAT, SS	8	08269
F	HOSE; 4”ID TO 3.5”ID X 3”L	1	08497	N	INSERT; CCV, NYLON	1	088201	V	WASHER; M6, SPLIT LOCK	2	1-3025
G	HOSE; 3”ID TO 3.25”ID X 2.5”L	1	084118	O	ADAPTOR; MAF SENSOR	1	21515-1	W	NUT; 6MM NYLOCK	2	08512
H	BADGE; CLEAR WINDOW, K&N	1	088114	P	GASKET	1	09069	X	HOSE CLAMP; #104	1	08697

If you need any assistance please call 1-800-858-3333 to speak with a representative in our Customer Service Center before returning the product.

NOTE: FAILURE TO FOLLOW INSTALLATION INSTRUCTIONS AND NOT USING THE PROVIDED HARDWARE MAY DAMAGE THE INTAKE TUBE, THROTTLE BODY AND ENGINE.

TO START:

1. Turn off the ignition and disconnect the negative battery cable.
NOTE: Disconnecting the negative battery cable erases pre-programmed electronic memories. Write down all memory settings before disconnecting the negative battery cable. Some radios will require an anti-theft code to be entered after the battery is reconnected. The anti-theft code is typically supplied with your owner’s manual. In the event your vehicles anti-theft code cannot be recovered, contact an authorized dealership to obtain your vehicles anti-theft code.



2. Remove the bolt that secures the passenger side of the engine cover.



3. Remove the engine cover bolt next to the oil fill cap.



4. Pull the engine cover up, forward and then off the engine.



5. Loosen the hose clamp that secures the PCV hose to the factory intake tube and then disconnect the PCV hose from the intake tube.



6. Loosen the hose clamp that secures the factory intake tube to the turbo inlet.

Continued INSTALLATION INSTRUCTIONS

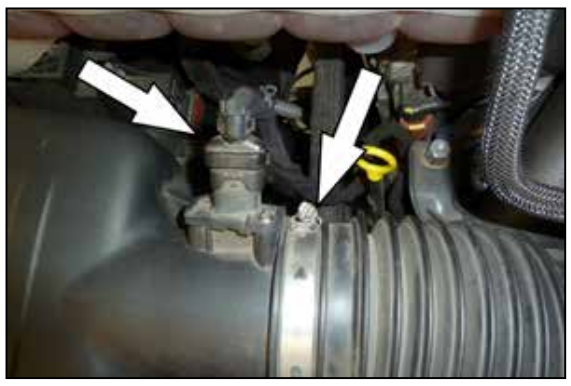

7. Loosen the hose clamp the secures the factory intake tube to the air filter housing and disconnect the MAF sensor electrical connection.



8. Remove the bolt that secures the intake tube to the engine. Remove the intake tube from the vehicle.



9. Pull the air filter housing up off the mounting post and out of the engine compartment.



10. Remove the four mounting grommets from the factory air filter housing and install them into the K&N air filter housing.



11. Install the filter adapter into the K&N air filter housing and secure with the provided hardware.



12. Install the K&N air filter housing so the mounting grommets engage with the mounting posts.



13. Install the K&N air filter onto the filter adapter and secure with the provided hose clamp.



14. Install the four provided grommets into the K&N air filter housing as shown.



15. Install the K&N logo window into the air filter housing lid and secure with the provided hardware.



16. Install the lid onto the filter housing so the mounting posts engage the grommets.



17. Install the step coupler onto the filter adapter and secure with the provided hose clamp.



18. Install the hump coupler onto the turbo inlet and secure with the provided hose clamp.

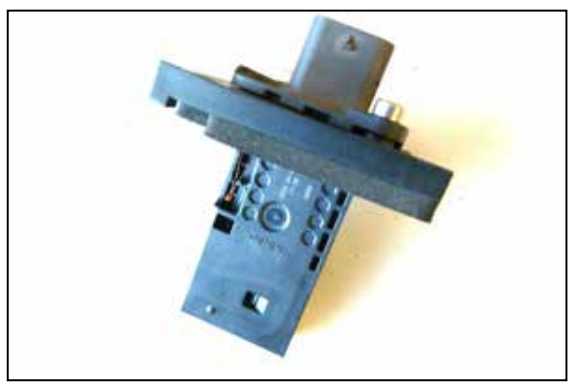

19. Remove the MAF sensor from the factory housing and install it into the provided adapter, secure with the provided hardware. Install the provided gasket onto the adapter.



20. Install the MAF sensor assembly into the K&N intake tube so the opening in the sensor is towards the filter end of the tube. Secure with the provided hardware.



21. Install the CCV insert into the K&N intake tube as shown.



22. Install the K&N intake tube into the couplers, adjust for best fit and secure with the provided hose clamps.



23. Reconnect the MAF sensor electrical connection.



24. Connect the PCV hose to the fitting on the K&N intake tube and secure with the provided hose clamp.



25. Reinstall the engine cover and secure with the factory hardware.



26. Reconnect the vehicle's negative battery cable. Double check to make sure everything is tight and properly positioned before starting the vehicle.

27. It will be necessary for all K&N® high flow intake systems to be checked periodically for realignment, clearance and tightening of all connections.
Failure to follow the above instructions or proper maintenance may void warranty.

ROAD TESTING:

1. Start the engine with the transmission in neutral or park, and the parking brake engaged. Listen for air leaks or odd noises. For air leaks secure hoses and connections. For odd noises, find cause and repair before proceeding. This kit will function identically to the factory system except for being louder and much more responsive.

2. Test drive the vehicle. Listen for odd noises or rattles and fix as necessary.

3. If road test is fine, you can now enjoy the added power and performance from your kit.

4. K&N Engineering, Inc., requires cleaning the intake system's air filter element every 100,000 miles. When used in dusty or off-road environments, our filters will require cleaning more often. We recommend that you visually inspect your filter once every 25,000 miles to determine if the screen is still visible. When the screen is no longer visible some place on the filter element, it is time to clean it. To clean and re-oil, purchase our filter Recharger® service kit, part number 99-5050 or 99-5000 and follow the easy instructions.

NOT LEGAL FOR SALE OR USE ON ANY POLLUTION CONTROLLED MOTOR VEHICLE IN CALIFORNIA OR STATES ADOPTING CALIFORNIA EMISSION PROCEDURES.

See knfilters.com for CARB status on each part for a specific vehicle

trailfortress.com/k-n-performance-air-intake-system-63-1586