TRAIL FORTRESS

BUILT FOR THE TRAIL. CHECKED FOR YOUR TRUCK.

K&N 63-1583 Installation Instructions

63 Series Intake for Ram 2500 & 3500 (2019-2024)

Part number: 63-1583

trailfortress.com/k-n-performance-air-intake-system-63-1583

Scan for fitment, price and install help

AIRCHARGER® HIGH-FLOW INTAKE KITS

NOT LEGAL FOR SALE OR USE ON ANY POLLUTION CONTROLLED MOTOR VEHICLE IN CALIFORNIA OR STATES ADOPTING CALIFORNIA EMISSION PROCEDURES.
See knfilters.com for CARB status on each part for a specific vehicle

INSTALLATION INSTRUCTIONS

63-1583
RAM
2019-23 2500/3500
V8-6.7L Turbo Diesel

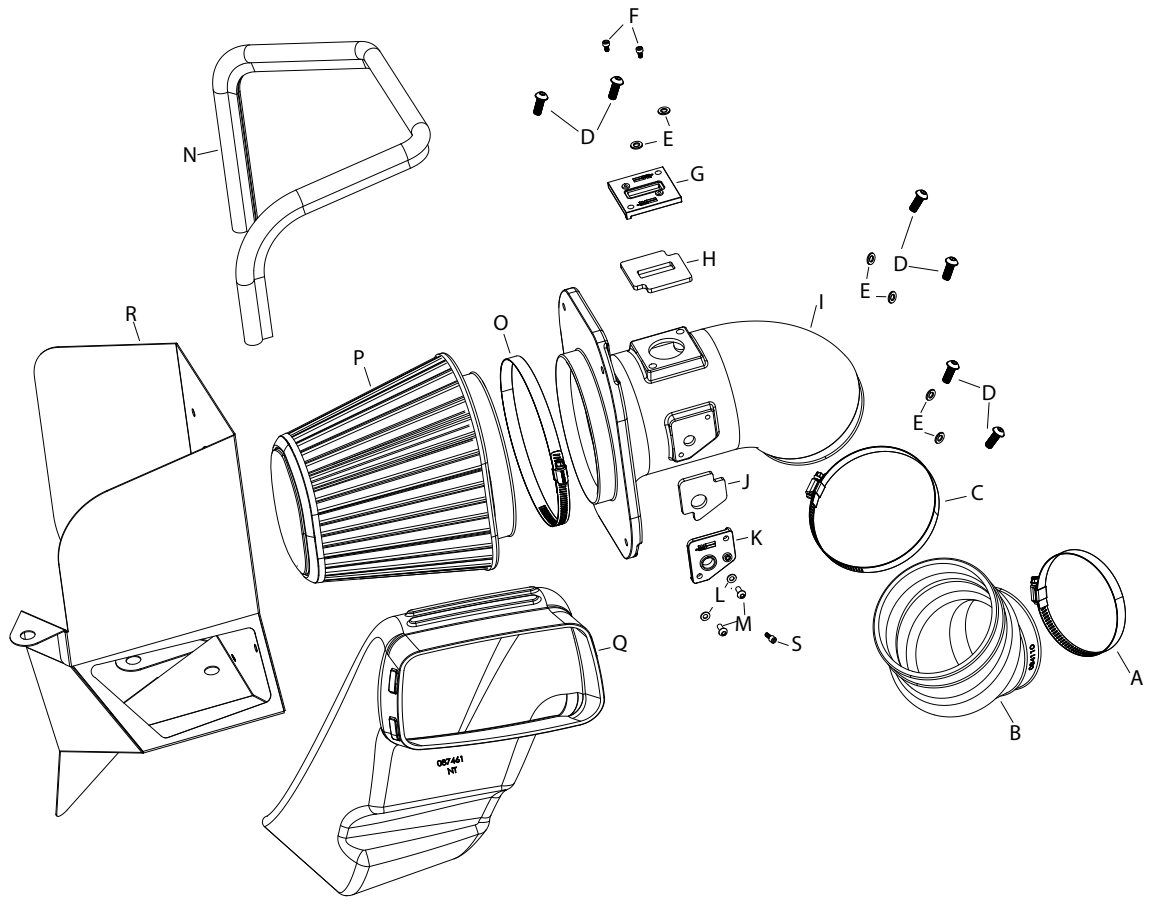

TOOLS NEEDED:

flat blade screw driver
ratchet
extension
8mm socket
10mm socket
2.5mm allen key
3mm allen key
4mm allen key
t15 torx

PARTS LIST:

	Description	Qty.	Part #		Description	Qty.	Part #		Description	Qty.	Part #
A	HOSE CLAMP #64 STAINLESS	1	08645	H	GASKET; 3/16” PORON	1	09069	O	HOSE CLAMP #104	1	08697
B	HOSE; HUMP 4"OD TO 5"OD	1	084110	I	MAF HOUSING; (NS)	1	087322	P	AIR FILTER	1	RU-5292
C	HOSE CLAMP #80 STAINLESS	1	08685	J	GASKET; TEMP SENSOR	1	09771	Q	AIR DUCT; (NT)	1	087461
D	BOLT; M6 X 1 X 16MM BTNHD	6	07730	K	ADAPTER; TEMP SENSOR	1	088021	R	HEAT SHIELD	1	07379
E	WASHER; 6MM FLAT	6	08269	L	WASHER; 5MM FLAT	2	08212	S	BOLT; M4-.7 x 12MM, BTNHD	1	07726
F	BOLT; M4-.7 X 8MM ALNHD	2	07733	M	BOLT; M5 X .8 X 12MM BTNHD	2	07734				
G	ADAPTOR; MAF SENSOR	1	21515-1	N	EDGE TRIM; 44”L	1	102486A				

If you need any assistance please call 1-800-858-3333 to speak with a representative in our Customer Service Center before returning the product.

NOTE: FAILURE TO FOLLOW INSTALLATION INSTRUCTIONS AND NOT USING THE PROVIDED HARDWARE MAY DAMAGE THE INTAKE TUBE, THROTTLE BODY AND ENGINE.

TO START:

1. Turn off the ignition and disconnect the negative battery cable.
NOTE: Disconnecting the negative battery cable erases pre-programmed electronic memories. Write down all memory settings before disconnecting the negative battery cable. Some radios will require an anti-theft code to be entered after the battery is reconnected. The anti-theft code is typically supplied with your owner’s manual. In the event your vehicles anti-theft code cannot be recovered, contact an authorized dealership to obtain your vehicles anti-theft code.





2. Remove the 14 push clips that secure the upper core support plastic cover and then remove the cover from the vehicle.

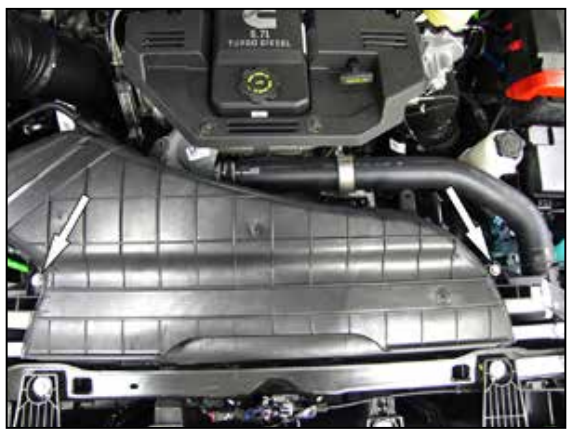

3. Remove the two bolts that secure the fresh air inlet duct to the core support and then remove the inlet from the vehicle.



4. Loosen the hose clamp that secures the intake tube to the air filter housing and disconnect the electrical connections of the two air sensors.



5. Remove the complete air filter housing from the vehicle as shown.
NOTE: K&N Engineering, Inc., recommends that customers do not discard factory air intake.



6. Loosen the hose clamp that secures the factory intake tube to the turbo inlet and then remove the tube from the vehicle.



7. Install the provided gaskets onto the bottom of the two air sensor adapters provided.



8. Remove the air sensors from the factory housing and install them into the K&N® sensor adapters using the provided hardware.



9. Install the two air sensor assemblies into the intake tube using the provided hardware. Be sure the top sensor is installed in the correct direction. The opening of the sensor should be towards the filter end of the tube.



10. Install the flex coupler onto the intake tube and secure with the provided hose clamp. The coupler is keyed and can only be install in one location.



11. Install the provided edge trim around the heat shield as shown, some trimming of the edge trim will be necessary.



12. Remove the three mounting grommets from the factory air filter housing and install them into the K&N® heat shield where shown.



13. Install the heat shield assembly into the vehicle so the factory mounting posts protrude through the mounting grommets.



14. Install the intake tube assembly onto the turbo inlet and into the heat shield. Secure the tube with the provided hose clamp and hardware. Reconnect the air sensor electrical connection.



15. Install the air filter onto the intake tube and secure with the provided hose clamp.



16. Install the K&N® fresh air duct into the heat shield and then install the factory portion of the fresh air duct and secure with the factory hardware.



17. Reinstall the factory core support cover and secure with the factory retaining clips.



18. Reconnect the vehicle's negative battery cable. Double check to make sure everything is tight and properly positioned before starting the vehicle.

19. It will be necessary for all K&N® high flow intake systems to be checked periodically for realignment, clearance and tightening of all connections. Failure to follow the above instructions or proper maintenance may void warranty.

ROAD TESTING:

1. Start the engine with the transmission in neutral or park, and the parking brake engaged. Listen for air leaks or odd noises. For air leaks secure hoses and connections. For odd noises, find cause and repair before proceeding. This kit will function identically to the factory system except for being louder and much more responsive.

2. Test drive the vehicle. Listen for odd noises or rattles and fix as necessary.

3. If road test is fine, you can now enjoy the added power and performance from your kit.

4. K&N Engineering, Inc., requires cleaning the intake system's air filter element every 100,000 miles. When used in dusty or off-road environments, our filters will require cleaning more often. We recommend that you visually inspect your filter once every 25,000 miles to determine if the screen is still visible. When the screen is no longer visible some place on the filter element, it is time to clean it. To clean and re-oil, purchase our filter Recharger® service kit, part number 99-5050 or 99-5000 and follow the easy instructions.

NOT LEGAL FOR SALE OR USE ON ANY POLLUTION CONTROLLED MOTOR VEHICLE IN CALIFORNIA OR STATES ADOPTING CALIFORNIA EMISSION PROCEDURES.

See knfilters.com for CARB status on each part for a specific vehicle

trailfortress.com/k-n-performance-air-intake-system-63-1583