TRAIL FORTRESS

BUILT FOR THE TRAIL. CHECKED FOR YOUR TRUCK.

K&N 63-1565 Installation Instructions

63 Series Intake for Challenger & Charger

Part number: 63-1565

trailfortress.com/k-n-performance-air-intake-system-63-1565

Scan for fitment, price and install help

AIRCHARGER® HIGH-FLOW INTAKE KITS

NOT LEGAL FOR SALE OR USE ON ANY POLLUTION CONTROLLED MOTOR VEHICLE IN CALIFORNIA OR STATES ADOPTING CALIFORNIA EMISSION PROCEDURES.

See knfilters.com for CARB status on each part for a specific vehicle

INSTALLATION INSTRUCTIONS

63-1565

DODGE / CHRYSLER

2012-23 Charger SRT8
2011-23 Challenger SRT8
2012-15 300C SRT8
V8-6.4L HEMI

NOTE: Not designed to fit models equipped with SHAKER hoods.

TOOLS NEEDED:

Flat Blade Screwdriver
4mm Allen Wrench
10mm Socket
14mm Socket
10mm Wrench
Extension
Ratchet

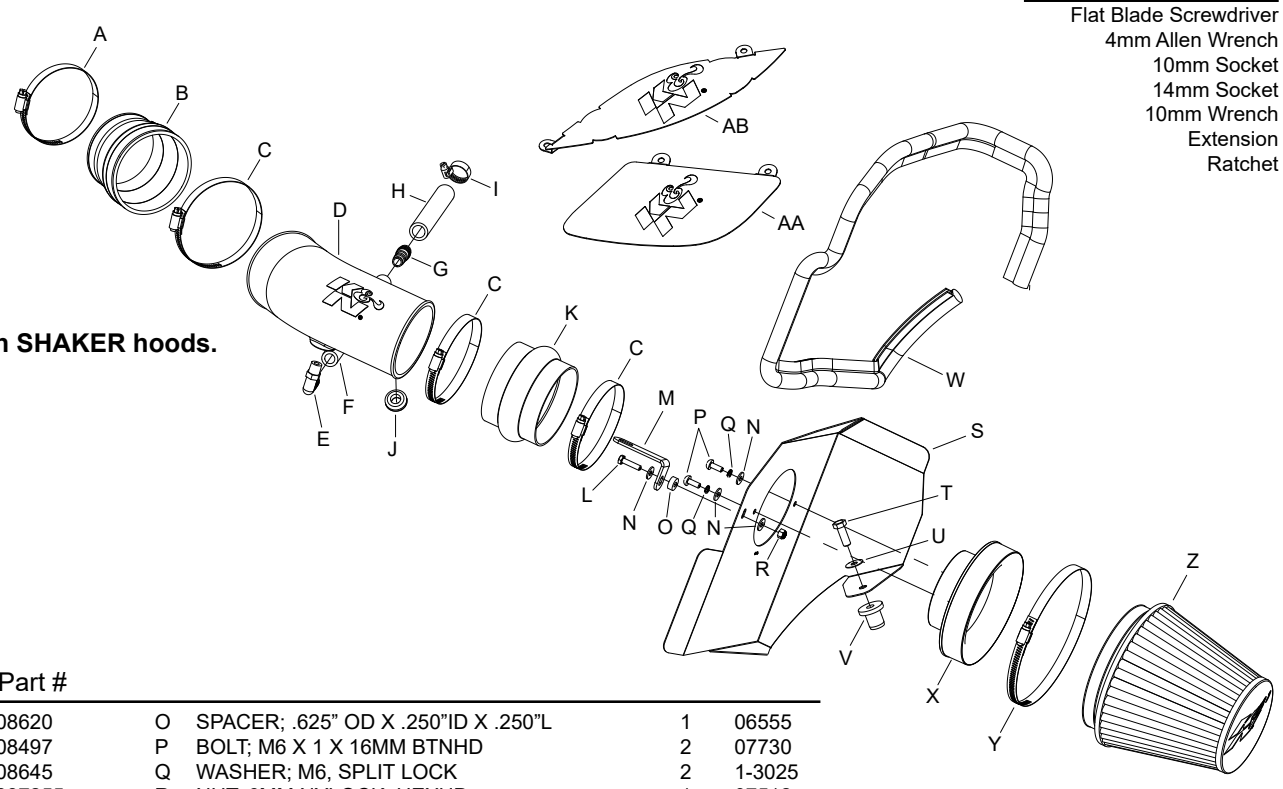

PARTS LIST:

	Description	Qty.	Part #				
A	HOSE CLAMP; #56	1	08620	O	SPACER; .625” OD X .250”ID X .250”L	1	06555
B	HOSE; 4”ID TO 3.5”ID X 3”L	1	08497	P	BOLT; M6 X 1 X 16MM BTNHD	2	07730
C	HOSE CLAMP; #64 STAINLESS	3	08645	Q	WASHER; M6, SPLIT LOCK	2	1-3025
D	INTAKE TUBE; (IM)	1	087255	R	NUT; 6MM NYLOCK, HEXHD	1	07512
E	VENT; 90DEG, 1/2” HOSE, 1/4”NPT	1	08110FK	S	HEAT SHIELD	1	074098A
F	HOSE; 1/2”ID X 12”L	1	087031	T	BOLT; 3/8”-16 X 1-1/4”L, HEXHD	1	07779
G	ADAPTER; HOSE, 3/4” X 1/2”BARB	1	8-146	U	WASHER; 3/8” FLAT WASHER	1	08134
H	HOSE; 3/4”ID X 6”L	1	5-4006	V	INSERT; 3/8-16 X 3/4 X 15/16L, RUBBER	1	08163
I	HOSE CLAMP; #16	1	08413	W	EDGE TRIM; 48”L	1	102485
J	GROMMET; 1-1/16OD, 1/2ID, 3/8THK	1	080544	X	ADAPTER; #454	1	27300
K	HOSE; HUMP 4”ID X 3”L	1	08418	Y	HOSE CLAMP; #104	1	08697
L	BOLT; M6-1.00 X 25MM	1	07858	Z	AIR FILTER	1	RU-1042
M	BRACKET; “L”	1	070742A	AA	BLOCK OFF	1	073226
N	WASHER; 6MM FLAT	4	08269	AB	BLOCK OFF; CHARGER	1	073229

If you need any assistance please call 1-800-858-3333 to speak with a representative in our Customer Service Center before returning the product.

NOTE: FAILURE TO FOLLOW INSTALLATION INSTRUCTIONS AND NOT USING THE PROVIDED HARDWARE MAY DAMAGE THE INTAKE TUBE, THROTTLE BODY AND ENGINE.

TO START:

1. Turn off the ignition and disconnect the negative battery cable.
NOTE: Disconnecting the negative battery cable erases pre-programmed electronic memories. Write down all memory settings before disconnecting the negative battery cable. Some radios will require an anti-theft code to be entered after the battery is reconnected. The anti-theft code is typically supplied with your owner’s manual. In the event your vehicles’ anti-theft code cannot be recovered, contact an authorized dealership to obtain your vehicles anti-theft code.



2. Disconnect the inlet air temperature air sensor electrical connection.



3. Lift up and remove the driver side ignition coil cover as shown.



4. Disconnect the crank case vent hose from the valve cover.



5. Loosen the hose clamp securing the intake tube to the throttle body.



6. Remove the bolt that secures the air box to the core support.



7. Lift up and remove the complete intake track from the vehicle.
NOTE: K&N Engineering, Inc., recommends that customers do not discard factory air intake.



8. Install the filter adapter into the heat shield and secure with the provided hardware.



9. Install the provided heat shield mounting bracket (070742A) along with the spacer onto the heat shield as shown.

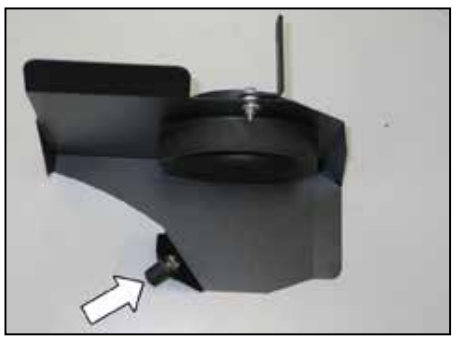

10. Install the provided rubber insert onto the heat shield as shown and secure with the provided hardware.



11. Install the provided edge trim onto the heat shield as shown.
NOTE: Some trimming of the edge trim will be necessary.



12. Install the provided silicone hump hose (08418) onto the filter adapter and secure with the provided hose clamp.



13. Set the heat shield assembly into position in the engine bay so the rubber insert passes into the air box mounting hole in the inner fender. Do not secure the heat shield at this time.



14. Install the silicone step hose (08497) onto the throttle body and secure with the provided hose clamp.



15. Remove the inlet air temperature sensor from the factory intake tube as shown.



16. Install the provided grommet and the factory inlet air temperature sensor into the K&N® intake tube as shown.
NOTE: Be sure to remove the factory o-ring before installing the inlet air temperature sensor.



17. Install the provided 90° vent fitting into the K&N® intake tube as shown.
NOTE: Plastic NPT fittings are easy to cross thread. Install the vent fitting "hand" tight, then turn it two complete turns with a wrench.



18. Install the K&N® intake tube into the silicone hump hose and then into the silicone step hose at the throttle body. Align the intake tube and heat shield for proper fit and then secure the intake tube with the provided hose clamps and the heat shield bracket with the factory air box retaining bolt removed in an earlier step.

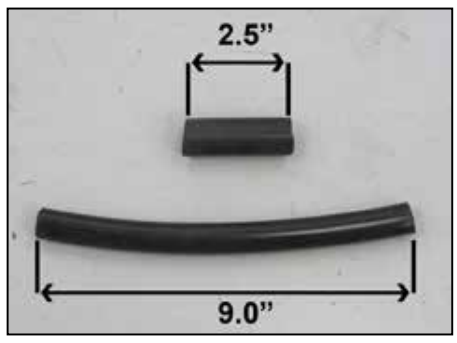

19. Cut the provided ½” silicone vent hose to a length of 9” long, and cut the 5/8” vent line to a length of 2.5” long.



20. Assemble the two vent lines together using the provided hose mender.



21. Install the assembled vent hose onto the fitting installed in the K&N® intake tube and then attach the open end to the valve cover port and secure with the provided hose clamp.



22. Reconnect the inlet air temperature sensor electrical connection.



23. Reinstall the coil cover.



24. Install the K&N® air filter and secure with the provided hose clamp.
NOTE: Drycharger® air filter wrap; part # RF-1042DK is available to purchase separately. To learn more about Drycharger® filter wraps or look up color availability please visit http://www.knfilters.com®.



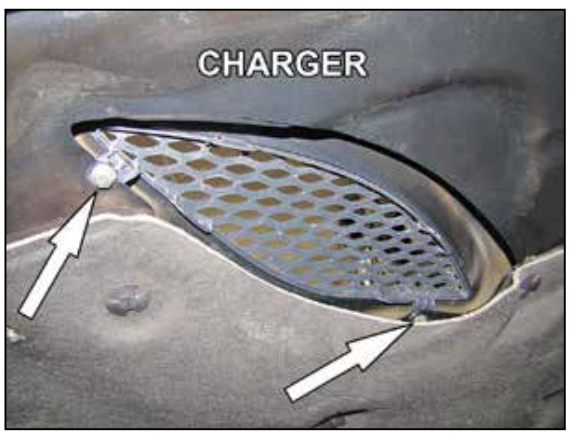

25. On vehicles equipped with hood vents: If the vehicle is to be driven during inclement weather it is recommended the shield be installed onto the hood vent to guard, the air filter from concentrated water. Remove the two bolts that secure the factory vent grid.





26. Install the guard so the mounting tabs are between the hood and the factory grid as shown.





27. Secure with the factory bolts from step 18.



28. Reconnect the vehicle's negative battery cable. Double check to make sure everything is tight and properly positioned before starting the vehicle.

29. It will be necessary for all K&N® high flow intake systems to be checked periodically for realignment, clearance and tightening of all connections. Failure to follow the above instructions or proper maintenance may void warranty.

ROAD TESTING:

1. Start the engine with the transmission in neutral or park, and the parking brake engaged. Listen for air leaks or odd noises. For air leaks secure hoses and connections. For odd noises, find cause and repair before proceeding. This kit will function identically to the factory system except for being louder and much more responsive.

2. Test drive the vehicle. Listen for odd noises or rattles and fix as necessary.

3. If road test is fine, you can now enjoy the added power and performance from your kit.

4. K&N Engineering, Inc., requires cleaning the intake system's air filter element every 100,000 miles. When used in dusty or off-road environments, our filters will require cleaning more often. We recommend that you visually inspect your filter once every 25,000 miles to determine if the screen is still visible. When the screen is no longer visible some place on the filter element, it is time to clean it. To clean and re-oil, purchase our filter Recharger® service kit, part number 99-5050 or 99-5000 and follow the easy instructions.

NOT LEGAL FOR SALE OR USE ON ANY POLLUTION CONTROLLED MOTOR VEHICLE IN CALIFORNIA OR STATES ADOPTING CALIFORNIA EMISSION PROCEDURES.

See knfilters.com for CARB status on each part for a specific vehicle

trailfortress.com/k-n-performance-air-intake-system-63-1565