K&N 57-3031-1 Installation Instructions

Cold Air Intake for Silverado & Sierra HD (2001-2006)

Part number: 57-3031-1

trailfortress.com/k-n-performance-air-intake-system-57-3031-1

Scan for fitment, price and install help

FUEL INJECTION PERFORMANCE KIT
FIPK GENERATION II™

INTAKE SYSTEMS FOR VEHICLES LISTED ARE 50 STATE LEGAL. SEE KNFILTERS.COM FOR CARB STATUS ON EACH PART FOR A SPECIFIC VEHICLE.

INSTALLATION INSTRUCTIONS

57-3031-1
CHEVROLET / GMC
2001-07 Silverado / Sierra 2500HD, 3500
V8-6.0L

NOTE: This kit was not designed to fit vehicles with a body lift.

TOOLS NEEDED:
Flat Blade Screwdriver
4mm Allen Wrench
1/2" Wrench

PARTS LIST:

	Description	Qty.	Part #
A	Hose clamp # 64 midi	2	08650
B	Hose; 4"ID X 1.5"L	1	08755
C	Intake tube (BM)	1	087019A
D	Hose clamp # 60	2	08624
E	Hose; Hump 3-5/8"ID	1	08176
F	Bolt, 5MM-.80 X 20MM	3	08320
G	Gasket	2	09033
H	Heat shield	1	07451A
I	Edge trim 50"L	1	102481
J	Adaptor; #240	1	08783A
K	Hose clamp # 104	1	08697
L	Air Filter	1	RU-1041

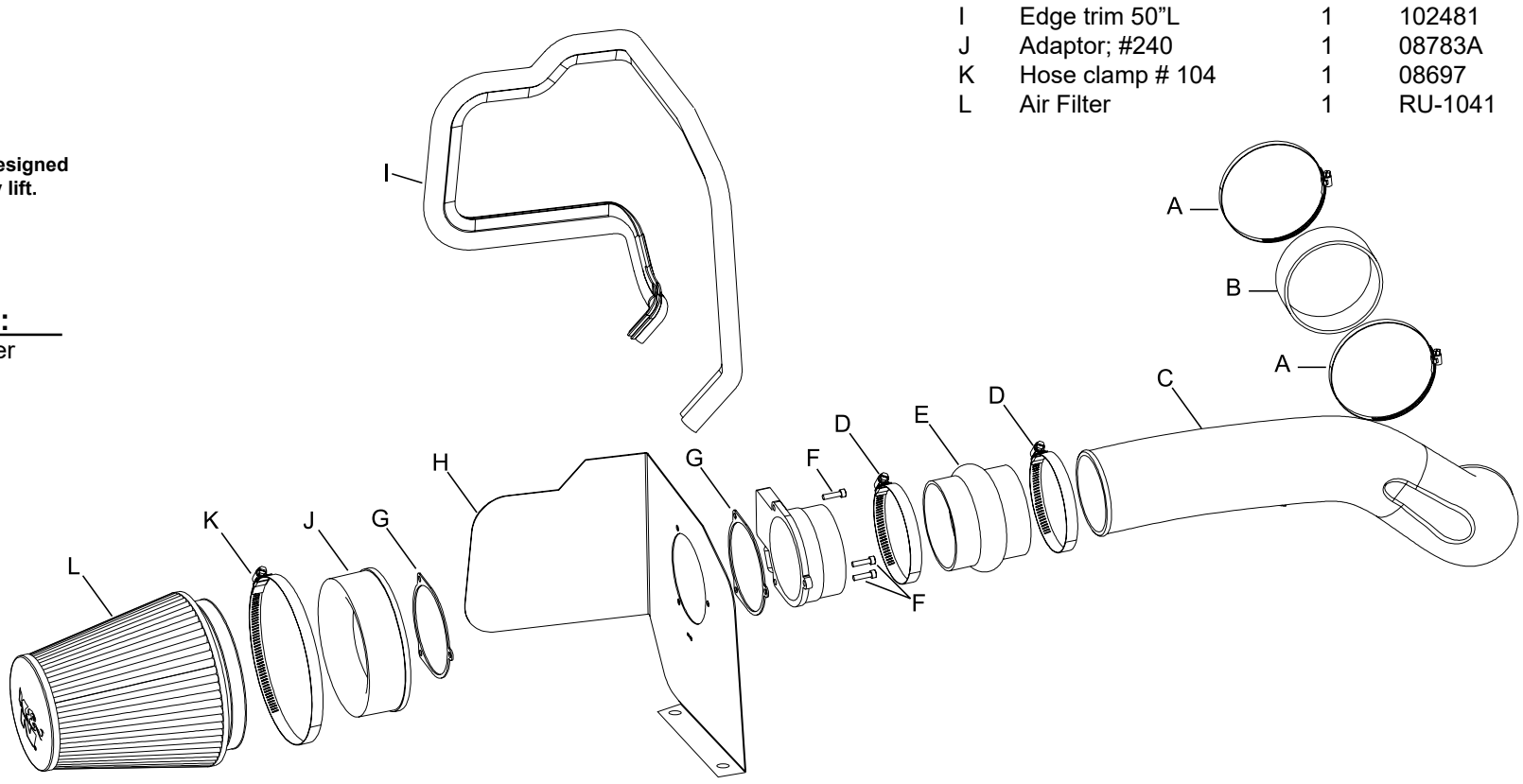

If you need any assistance please call 1-800-858-3333 to speak with a representative in our Customer Service Center before returning the product.

NOTE: FAILURE TO FOLLOW INSTALLATION INSTRUCTIONS AND NOT USING THE PROVIDED HARDWARE MAY DAMAGE THE INTAKE TUBE, THROTTLE BODY AND ENGINE.

TO START:

1. Turn off the ignition and disconnect the negative battery cable.
NOTE: Disconnecting the negative battery cable erases pre-programmed electronic memories. Write down all memory settings before disconnecting the negative battery cable. Some radios will require an anti-theft code to be entered after the battery is reconnected. The anti-theft code is typically supplied with your owner's manual. In the event your vehicles' anti-theft code cannot be recovered, contact an authorized dealership to obtain your vehicles anti-theft code.

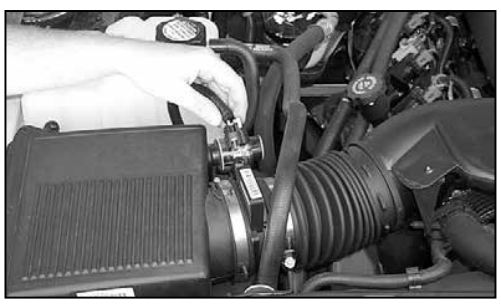

2. Disconnect the mass air sensor electrical connection.



3. Loosen the hose clamps at the throttle body and at the mass air sensor, then remove the factory intake tube as shown.

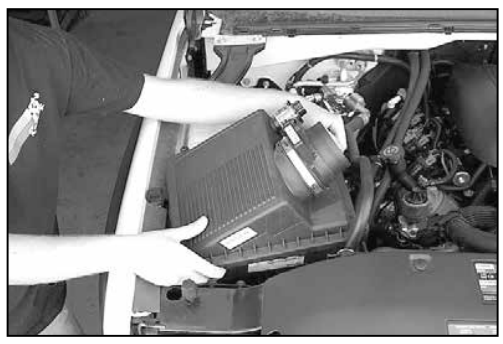

4. Pull firmly upwards to release the air cleaner assembly from the mounting tray grommets, then remove the assembly.
NOTE: K&N Engineering, Inc., recommends that customers do not discard factory air intake.

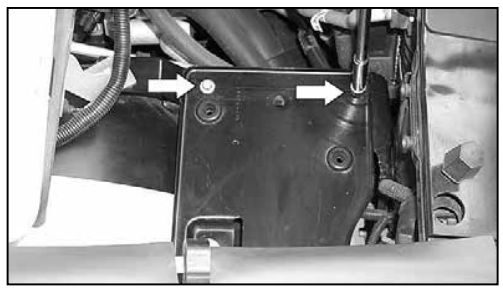

5. Loosen and remove the two air cleaner mounting tray bolts as shown.

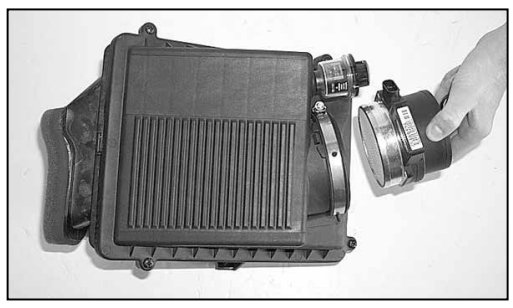

6. Loosen the hose clamp and remove the mass air sensor from the air cleaner.

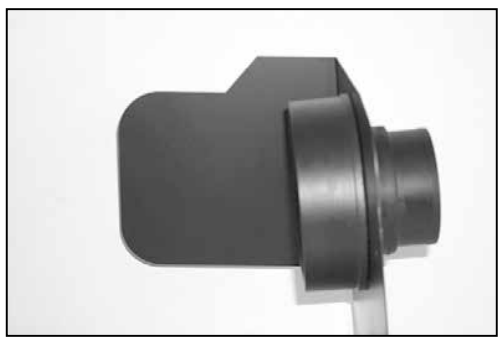

7. Assemble the mass air adapter, heat shield, gaskets and the mass air sensor as shown above.



8. Apply the trim seal to the heat shield assembly as shown.



9. Install and mount the heat shield assembly to the air cleaner mounting tray using the bolts removed in step 5.