K&N 57-3010-1 Installation Instructions

Cold Air Intake for Camaro & Firebird (1993-1997)

Part number: 57-3010-1

trailfortress.com/k-n-performance-air-intake-system-57-3010-1

Scan for fitment, price and install help

FUEL INJECTION PERFORMANCE KIT
FIPK GENERATION II™

INTAKE SYSTEMS FOR VEHICLES LISTED ARE 50 STATE LEGAL. SEE KNFILTERS.COM FOR CARB STATUS ON EACH PART FOR A SPECIFIC VEHICLE.

INSTALLATION INSTRUCTIONS

57-3010-1
CHEVROLET / PONTIAC
Camaro - Z28 / Firebird - Trans Am
1993-95 V6-3.4L
1993-97 V8-5.7L

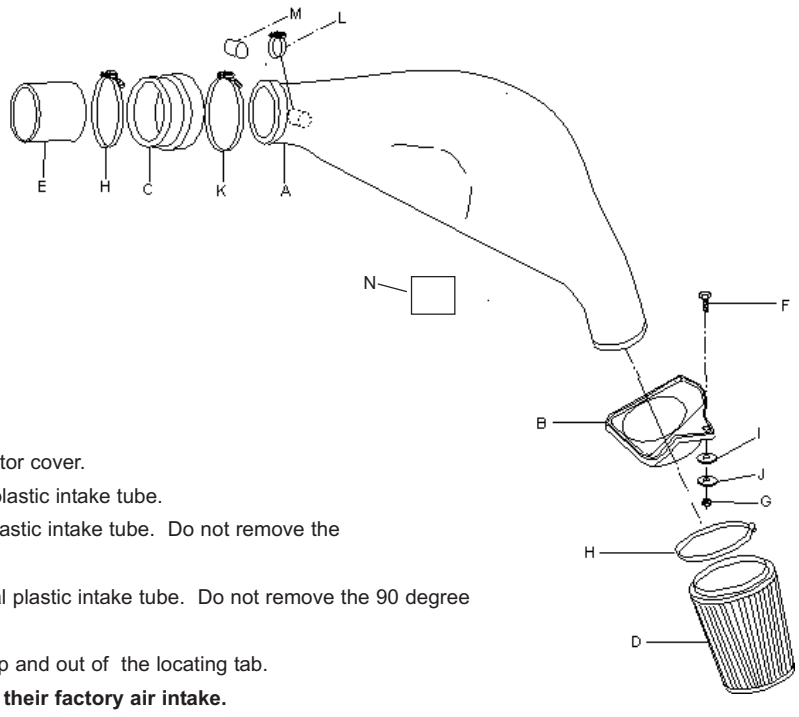

NOTE: Not for vehicles with Ram Air or Traction Control

PARTS LIST:

A	Intake tube	1	08872
B	Mounting plate	1	08873
C	Adapter	1	21536-1
D	Air filter	1	KRU3500E
E	Speed density adapter	1	08874
F	Bolt; 1/4-20 X 3/4 Hexhead	1	08386
G	1/4-20 nylock nut	1	07517
H	Hose clamp #64	2	08648
I	Rubber washer	1	21685
J	Fender washer	1	08160
K	Hose clamp #72	1	08671
L	Hose clamp #12	1	08420
M	Vinyl cap plug	1	08119
N	Gasket	1	09809

INSTALLATION

See the figure below for stock part locations.
See the exploded view for finished kit locations.

1) Disconnect the vehicles negative battery cable.
2) Remove the retaining pin holding the intake tube to the radiator cover.
3) Remove the A.I.R. pump hose from the back of the original plastic intake tube.
4a) '93 models - Loosen hose clamps and remove the original plastic intake tube. Do not remove the 90 degree rubber boot.
4b) '94-97 models - Loosen hose clamps and remove the original plastic intake tube. Do not remove the 90 degree rubber boot or the mass air sensor.
5) Now you can remove the air cleaner assembly by sliding it up and out of the locating tab.
NOTE: K&N recommends that customers do not discard their factory air intake.
6) On Firebirds and Trans Ams the headlamp control module is located on the interior air duct. This air duct is to the right of the air cleaner assembly and is retained by a plastic push-clip. Slide a screwdriver between the air duct and the sheet metal then pry upward and remove. Disconnect the wires and remove the module which will be relocated later in the installation.
7) The K&N Air filter will be installed from underneath the vehicle which requires the removal of the plastic undertray. Before doing so you must first remove the five far left bolts of the air deflector. Now remove the undertray which is secured by seven remaining screws (as shown in fig. 1). **NOTE: If you have a vehicle that is lowered it may be necessary to raise the car. Be sure to use jack stands and chock the rear wheels to secure the vehicle.**
8) Place the mounting plate into the lower bulkhead (as shown in fig. 1). Make sure that it is properly seated, then from below the vehicle, mark the mounting plate using the original air duct hole as your guide.
9) Remove the mounting plate and drill a 1/4" hole. Now re-position the plate and secure it using the provided hardware. (as shown in fig. 1)
10) Assemble the intake tube, tube adapter and speed density adapter (as shown in fig. 2). 94-97 models - dis-regard the speed density adapter which is necessary for 93 models only.
11) Now slide the intake tube assembly into place (as shown in fig. 3). **NOTE: Some vehicles have a "Rib" on the radiator cover (as shown in fig. 1&3). This "rib" will need to be trimmed to give sufficient clearance, then file any sharp edges.**
12) Trans Am & Firebird models - Once the intake tube is properly positioned, test fit the head lamp control module on the inner fenderwell (as shown in fig. 3). Then remove the intake assembly, and attach the double sided adhesive patch to the back of the head lamp control module and attach it to a suitable place on the inner fenderwell, then reconnect the module wires.
13) Now re-position the intake tube for best fit and clearance, tighten clamps at the tube adapter and reconnect the A.I.R. pump hose on the new intake tube using the supplied hose clamp.
NOTE: Use the supplied vinyl cap plug if your vehicle does not have an A.I.R. pump.
14) From below the car, attach the K&N Air filter onto the intake tube which has been slid through the mounting plate. Tighten the Air filter hose clamp (as shown in fig. 3).
15) Now re-install the plastic undertray and air deflector.
16) Re-connect the vehicles negative battery cable. Double check to make sure everything is tight and properly positioned before starting the vehicle.
17) The C.A.R.B. exemption sticker, (attached) must be placed in a visible area under the hood, so that an emissions inspector can see it when the vehicle is required to be tested for emissions. California requires testing every two years, other states may vary.
18) It will be necessary for all FIPK's to be checked periodically for realignment, clearance and tightening of all connections. Failure to follow the above instructions or proper maintenance may void warranty.

CAUTION: The Air filter has been positioned low to maximize the performance of your vehicle.
Extreme care should be taken in wet conditions as excessive water in the filter can lead to engine damage.

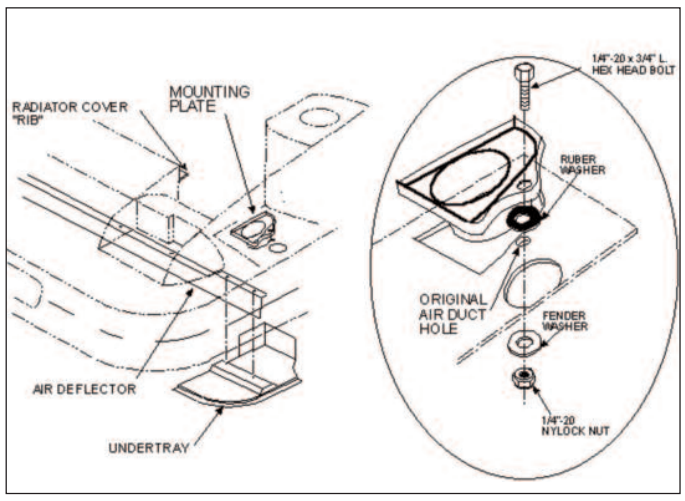

fig. 1

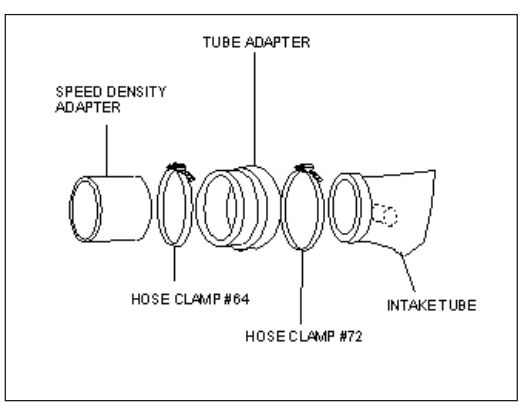

fig. 2

ROAD TESTING

Start the engine with the transmission in neutral or park, and the emergency brake on. Listen for any air leaks or odd noises. If there are air leaks, make sure the hose connections are secure. If there are any odd noises, check for the cause and repair before proceeding. The K&N air filter® Injection Performance Kit will function identically to the factory air filter with the exception of being slightly louder than stock and much more responsive. If all preliminary checks are okay, then a road test is necessary. Listen carefully for rattling or other odd noises and fix as necessary. If the road test is fine, you can enjoy driving as normal with the added response and power. We suggest that the air filter® element be checked periodically for dirt. This is now very easy due to the open element configuration. If the filter material is overly dirty, service it according to the instructions that are in the Recharger service kit, part number 99-5050 or 99-5000. If you have any questions or problems, inquire at your nearest K&N dealer, or direct to K&N Engineering.

Chevrolet Camaro-Z28/Pontiac Firebird-Trans Am engine

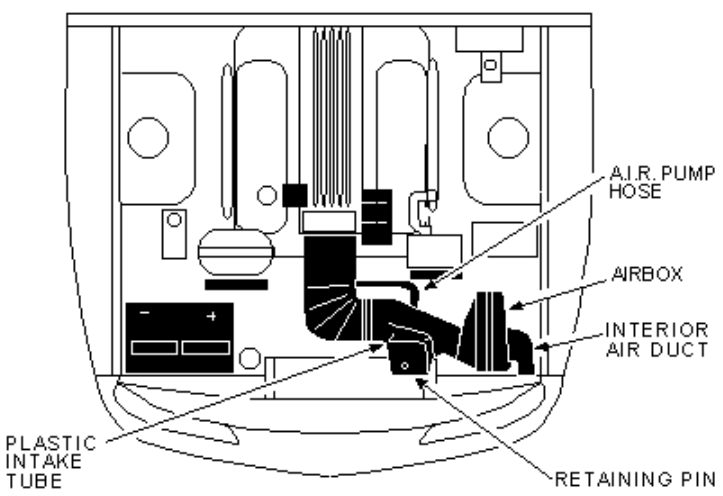

Refer to this diagram for the location of the various parts listed in the installation instructions.

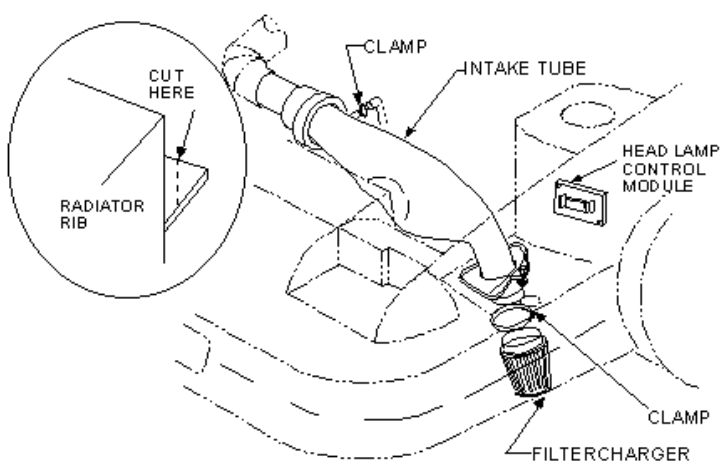

fig. 3

FREE K&N DECAL To register your warranty, please see us online at knfilters.com/register. FREE K&N DECAL

P.O. BOX 1329, RIVERSIDE, CA, 92502 USA (951) 826-4000 FAX (951) 826-4001 TECH: (800) 858-3333 WWW:http://KNFilters.com e-mail: Tech@KNFilters.com

17803F
4/14/14

trailfortress.com/k-n-performance-air-intake-system-57-3010-1