TRAIL FORTRESS

BUILT FOR THE TRAIL. CHECKED FOR YOUR TRUCK.

K&N 57-2561 Installation Instructions

Cold Air Intake for Ford Ranger & Mazda B4000

Part number: 57-2561

trailfortress.com/k-n-performance-air-intake-system-57-2561

Scan for fitment, price and install help

FUEL INJECTION PERFORMANCE KIT
FIPK GENERATION II™

INTAKE SYSTEMS FOR VEHICLES LISTED ARE 50 STATE LEGAL. SEE KNFILTERS.COM FOR CARB STATUS ON EACH PART FOR A SPECIFIC VEHICLE.

INSTALLATION INSTRUCTIONS

57-2561
FORD / MAZDA
2004-11 RANGER
2004-09 B4000
V6-4.0L

NOTE: This kit was not designed to fit vehicles with a body lift.

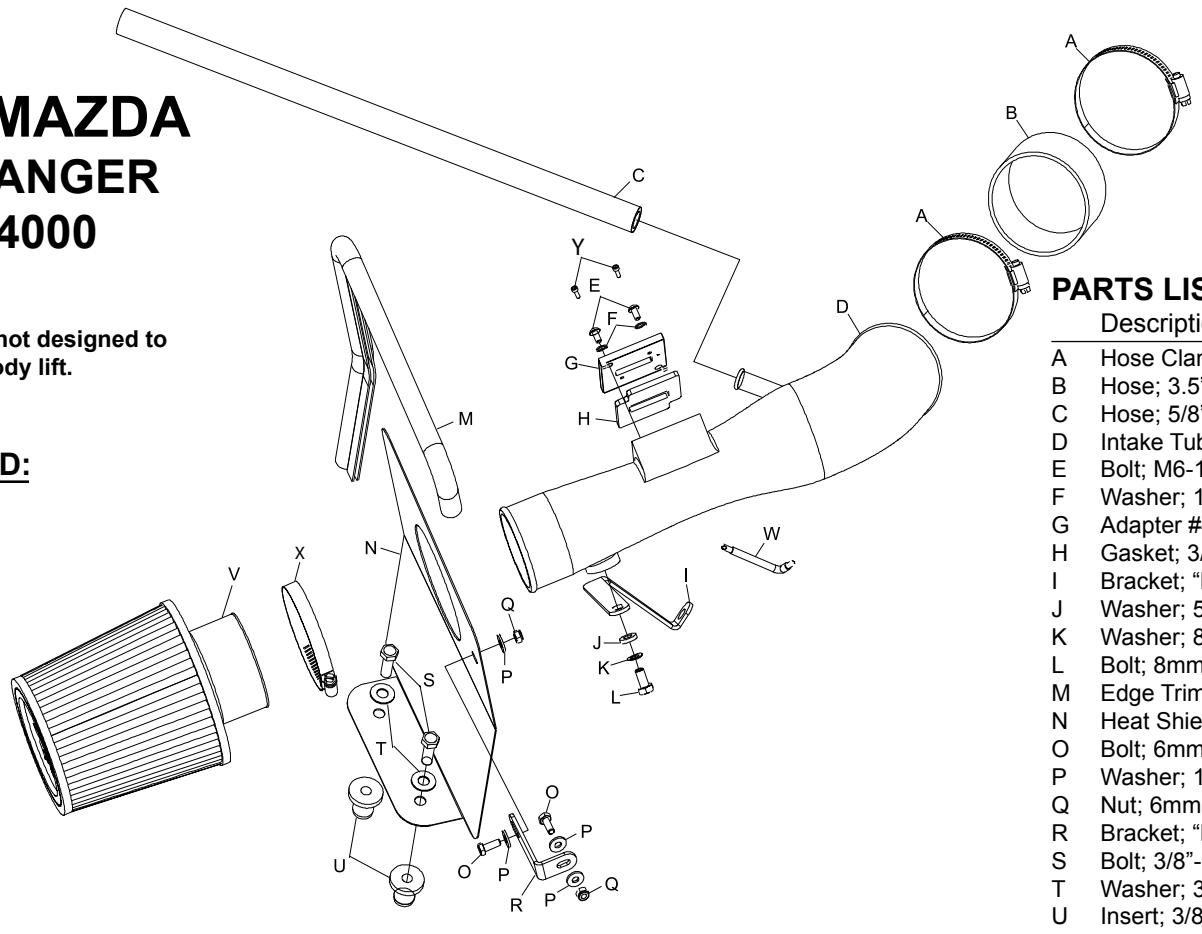

TOOLS NEEDED:

Flat Blade Screwdriver
Ratchet
Extension
7mm Socket
10mm Socket
10mm Wrench

PARTS LIST:

	Description	Qty.	Part #
A	Hose Clamp #56	2	08620
B	Hose; 3.5”IDx2.0”L, Black Silicone	1	08630
C	Hose; 5/8”IDx20”L, Black Silicone	1	08542
D	Intake Tube	1	087133
E	Bolt; M6-1.00x16mm, B/H/A	2	07730
F	Washer; 1/4” Split Lock	2	08198
G	Adapter #420	1	21515
H	Gasket; 3/16”	1	09069
I	Bracket; “L” Large	1	010081
J	Washer; 5/16”ID X 5/8”OD Flat	1	08276
K	Washer; 8mm Wave	1	08239
L	Bolt; 8mm-1.25 X 16mm, Hex	1	07844
M	Edge Trim 26”	1	102488
N	Heat Shield	1	07488
O	Bolt; 6mm-1.00x16mm Hex	2	07795
P	Washer; 1/4”ID X 5/8”OD Flat	4	08275
Q	Nut; 6mm Nylock	2	07553
R	Bracket; “L” Small	1	070742
S	Bolt; 3/8”-16x1.25”, Hex	2	07779
T	Washer; 3/8” Flat	2	08134
U	Insert; 3/8”-16x3/4”x15/16”L	2	08163
V	Air Filter	1	RU-4990
W	Wrench, T20 T/R, L-Key	1	69801
X	Hose Clamp #52	1	08610
Y	Bolt; M4-0.07 8mm, A/H Cap, SS	2	07733

NOTE: FAILURE TO FOLLOW INSTALLATION INSTRUCTIONS AND NOT USING THE PROVIDED HARDWARE MAY DAMAGE THE INTAKE TUBE, THROTTLE BODY AND ENGINE.

TO START:

1. Turn off the ignition and disconnect the negative battery cable.
NOTE: Disconnecting the negative battery cable erases pre-programmed electronic memories. Write down all memory settings before disconnecting the negative battery cable. Some radios will require an anti-theft code to be entered after the battery is reconnected. The anti-theft code is typically supplied with your owner’s manual. In the event your vehicles’ anti-theft code cannot be recovered, contact an authorized dealership to obtain your vehicles anti-theft code.



2. Depress the locking tab on the mass air sensor electrical connection and then disconnect the electrical connection and separate the harness from the stock intake tube wiring harness clip.



3. Remove the three- engine cover mounting bolts shown.



4. Remove the engine cover from the engine.



5. Depress the green locking tab on the crankcase vent hose attached to the valve cover of the engine and then disconnect the vent hose from the valve cover as shown.



6. Loosen the hose clamp which secures the intake tube to the throttle body, release the two clam shell clamps which secure the upper airbox lid and then remove the airbox lid and intake tube from the vehicle.



7. Pull firmly up on the lower airbox housing to dislodge from the mounting grommets and remove lower airbox from the vehicle.
NOTE: K&N Engineering, Inc., recommends that customers do not discard factory air intake.



8. Pull firmly on the air duct to dislodge it from core support and remove from the vehicle.

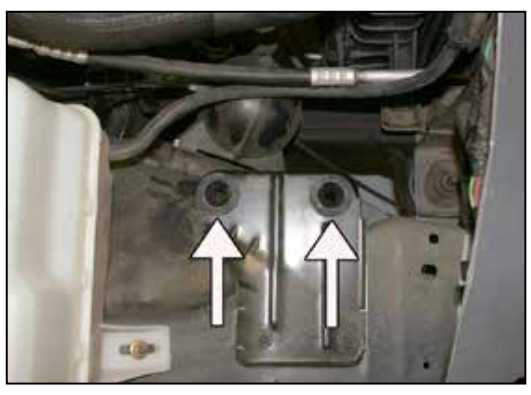

9. Remove the two-airbox mounting grommets from the mounting plate shown.



10. Install the silicone hose (08630) onto the throttle body and secure with the provided hose clamp.



11. Using the “TORX” wrench provided, remove the mass air sensor from the stock airbox assembly as shown.

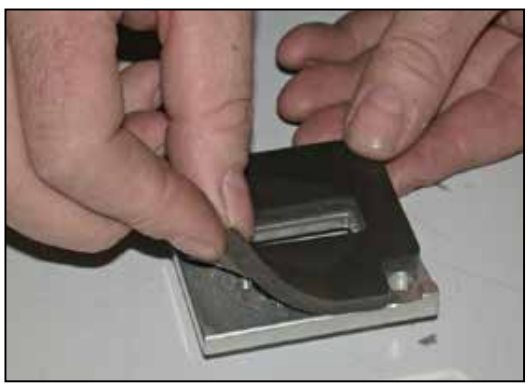

12. Install the provided gasket onto the K&N® mass air adapter as shown. Sticky side down.

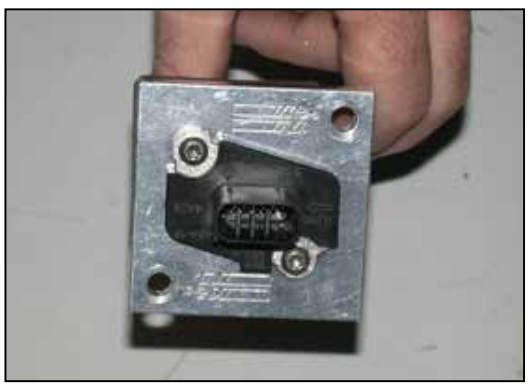

13. Using the factory mounting screws, install mass air sensor into the K&N® adapter assembly as shown.



14. Install the mass air sensor assembly into the K&N® intake tube as shown.
NOTE: Make sure the open end of the sensor is towards the filter end of the tube.



15. Secure the mass air assembly onto K&N® intake tube using the hardware provided as shown.



16. Install the provided tube-mounting bracket (010081) onto the K&N® intake tube with the provided hardware as shown.



17. Remove the front lower alternator mounting bolt shown.



18. Install the K&N® intake tube into the silicone hose at the throttle body and secure the bracket in place on the alternator with the bolt removed in step #17.

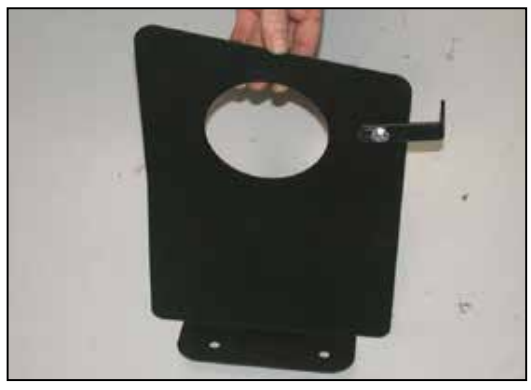

19. Install the heat shield mounting bracket (070742) onto the heat shield with the provided hardware as shown.



20. Install the provided edge trim onto the heat shield as shown.



21. Install the two provided threaded inserts into the lower airbox mounting plate at shown.



22. Install the heat shield assembly into the vehicle so the bracket lines up with the factory in the core support and the heat shield holes line up with the threaded inserts installed in step #21.



23. Install the provided crankcase vent hose onto the fitting at the valve cover then attach the other end to the port on the K&N® intake tube.



24. Reconnect the mass air sensor electrical connection.

Continued INSTALLATION INSTRUCTIONS



25. Install the air filter and secure with hose clamp provided.



26. Reinstall the engine cover and secure with the factory mounting bolts.



27. Reconnect the vehicle's negative battery cable. Double check to make sure everything is tight and properly positioned before starting the vehicle.

28. The C.A.R.B. exemption sticker, (attached), must be visible under the hood so that an emissions inspector can see it when the vehicle is required to be tested for emissions. California requires testing every two years, other states may vary.

29. It will be necessary for all K&N® high flow intake systems to be checked periodically for realignment, clearance and tightening of all connections. Failure to follow the above instructions or proper maintenance may void warranty.

ROAD TESTING:

1. Start the engine with the transmission in neutral or park, and the parking brake engaged. Listen for air leaks or odd noises. For air leaks secure hoses and connections. For odd noises, find cause and repair before proceeding. This kit will function identically to the factory system except for being louder and much more responsive.

2. Test drive the vehicle. Listen for odd noises or rattles and fix as necessary.

3. If road test is fine, you can now enjoy the added power and performance from your kit.

4. K&N Engineering, Inc., requires cleaning the intake system's air filter element every 100,000 miles. When used in dusty or off-road environments, our filters will require cleaning more often. We recommend that you visually inspect your filter once every 25,000 miles to determine if the screen is still visible. When the screen is no longer visible some place on the filter element, it is time to clean it. To clean and re-oil, purchase our filter Recharger® service kit, part number 99-5050 or 99-5000 and follow the easy instructions.

INTAKE SYSTEMS FOR VEHICLES LISTED ARE 50 STATE LEGAL. SEE KNFILTERS.COM FOR CARB STATUS ON EACH PART FOR A SPECIFIC VEHICLE.

• 1455 CITRUS ST., P.O. BOX 1329, RIVERSIDE, CA., U.S.A. 92502 • TECH SERVICE 800-858-3333 • FAX 951-826-4001
• e-mail: tech@knfilters.com® • WWW: http://www.knfilters.com®

18493F
1/26/15

trailfortress.com/k-n-performance-air-intake-system-57-2561