K&N 57-1571 Installation Instructions

Cold Air Intake for Ram 1500 & 1500 Classic (2014-2019)

Part number: 57-1571

trailfortress.com/k-n-performance-air-intake-system-57-1571

Scan for fitment, price and install help

FUEL INJECTION PERFORMANCE KIT

FIPK GENERATION II™

INTAKE SYSTEMS FOR VEHICLES LISTED ARE 50 STATE LEGAL. SEE KNFILTERS.COM FOR CARB STATUS ON EACH PART FOR A SPECIFIC VEHICLE.

INSTALLATION INSTRUCTIONS

57-1571
RAM
2014-19 Ram 1500
V6-3.0L Turbo Diesel

NOTE: This kit was not designed to fit vehicles with a body lift.

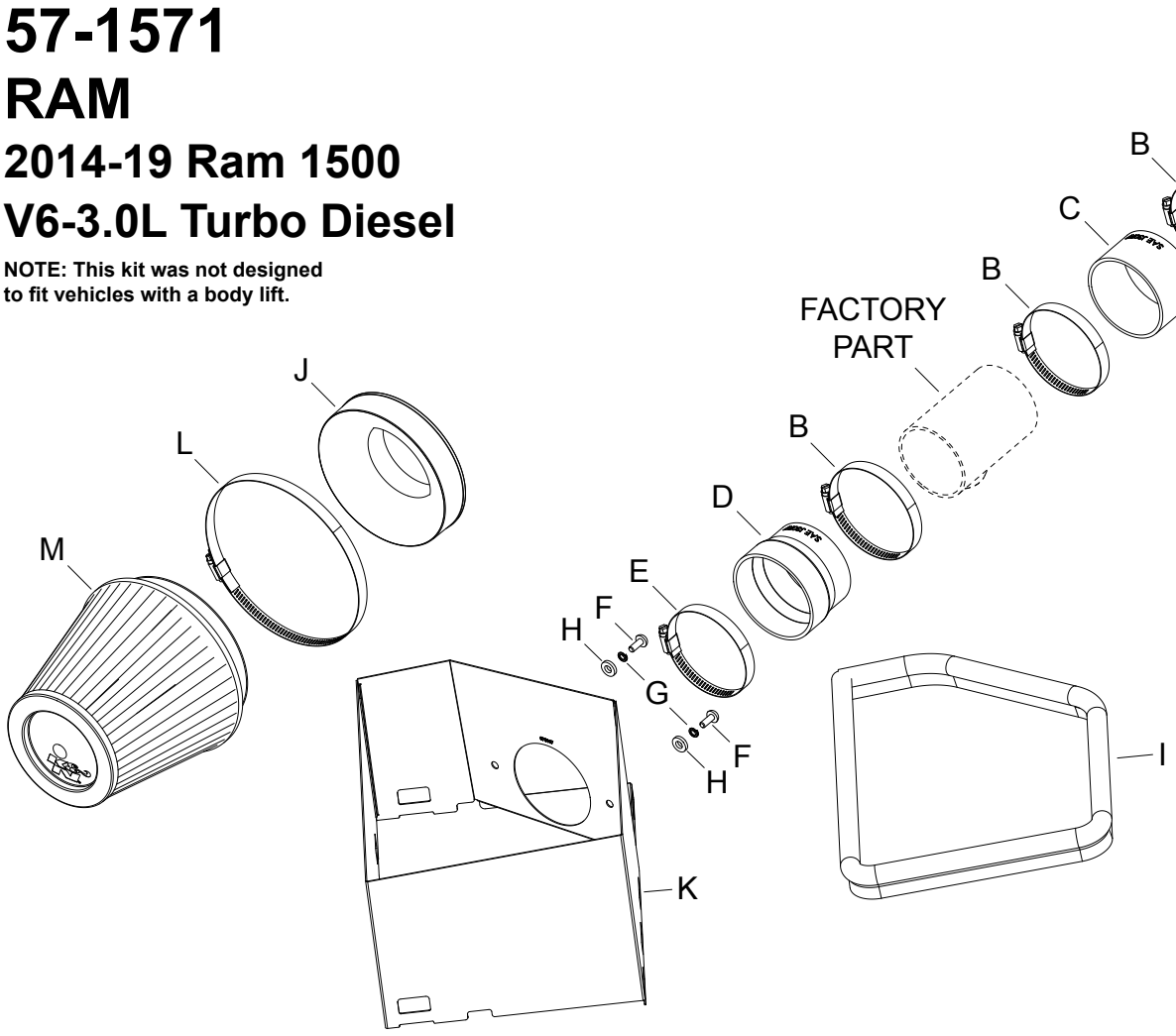

TOOLS NEEDED:

ratchet
extension
5/16” socket
flat blade screw driver
t25 torx
4mm allen

PARTS LIST:

	Description	Qty.	Part #
A	INTAKE TUBE (KD)	1	087298A
B	HOSE CLAMP #52	3	08610
C	HOSE; 3-1/4" ID X 2" L REIN	1	08690
D	HOSE; 3.5"ID TO 3.25"ID X 2.5"L	1	08496
E	HOSE CLAMP #56	1	08620
F	BOLT; M6 X 1.00 X 16MM, SS	2	07730
G	WASHER, M6 SPLIT LOCK ZINC	2	1-3025
H	WASHER; 1/4"ID X 5/8"OD	2	08275
I	EDGE TRIM (48")	1	102485A
J	ADAPTER; UNIVERSAL, 6", 3.5"	1	21512-1
K	HEAT SHIELD	1	073187
L	HOSE CLAMP # 104	1	08697
M	FILTER CHARGER	1	RF-1042XD

If you need any assistance please call 1-800-858-3333 to speak with a representative in our Customer Service Center before returning the product.

NOTE: FAILURE TO FOLLOW INSTALLATION INSTRUCTIONS AND NOT USING THE PROVIDED HARDWARE MAY DAMAGE THE INTAKE TUBE, THROTTLE BODY AND ENGINE.

TO START:

1. Turn off the ignition and disconnect the negative battery cable.
NOTE: Disconnecting the negative battery cable erases pre-programmed electronic memories. Write down all memory settings before disconnecting the negative battery cable. Some radios will require an anti-theft code to be entered after the battery is reconnected. The anti-theft code is typically supplied with your owner’s manual. In the event your vehicles anti-theft code cannot be recovered, contact an authorized dealership to obtain your vehicles anti-theft code.



2. Disconnect the mass air sensor electrical connection.



3. Loosen the hose clamp securing the factory intake tube to the mass air sensor.



4. Release the four clips securing the upper air filter housing and then remove the housing and air filter.



5. Lift up to dislodge the decorative engine cover and then remove the cover.



6. Loosen the hose clamp securing the intake tube to the turbo inlet hose. Lift up the intake tube to dislodge it from the mounting stud and then remove the tube from the vehicle.
NOTE: K&N Engineering, Inc., recommends that customers do not discard factory air intake.



7. Install the provided coupling hose (08690) halfway onto the K&N® intake tube and secure with the provided hose clamp as shown.



8. Install the K&N® intake tube into the factory turbo inlet hose and secure with the factory hose clamp.



9. Remove the mass air sensor from the factory upper air filter housing.



10. Install the provided coupling hose (08496) onto the mass air sensor as shown and secure with the provided hose clamp.



11. Install the mass air sensor into the coupling hose installed onto the K&N® intake tube.

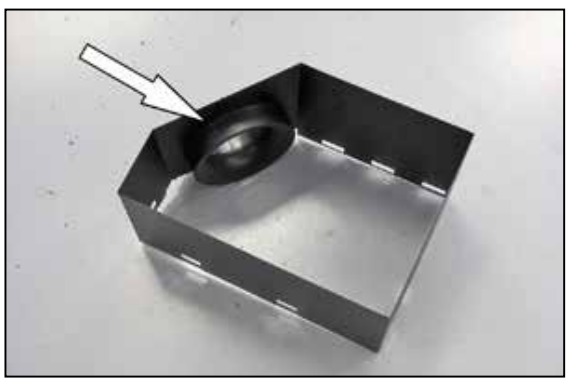

12. Install the provided radius adapter into the heat shield and secure with the provided hardware.



13. Install the provided edge trim onto the heat shield as shown.
NOTE: Some trimming of the edge trim will be necessary.



14. Install the heat shield onto the lower air filter housing and secure with the factory retaining clips.
NOTE: It is best to install the coupling hose onto the filter adapter as the heat shield is being set into position.



15. Reconnect the mass air sensor electrical connection.



16. Install the K&N® air filter onto the filter adapter and secure with the provided hose clamp.
NOTE: Drycharger® air filter wrap; part # RF-1042DK is available to purchase separately. To learn more about Drycharger® filter wraps or look up color availability please visit http://www.knfilters.com®.



17. Reinstall decorative engine cover.



18. Reconnect the vehicle's negative battery cable. Double check to make sure everything is tight and properly positioned before starting the vehicle.

19. The C.A.R.B. exemption sticker, (attached), must be visible under the hood so that an emissions inspector can see it when the vehicle is required to be tested for emissions. California requires testing every two years, other states may vary.

20. It will be necessary for all K&N® high flow intake systems to be checked periodically for realignment, clearance and tightening of all connections. Failure to follow the above instructions or proper maintenance may void warranty.

ROAD TESTING:

1. Start the engine with the transmission in neutral or park, and the parking brake engaged. Listen for air leaks or odd noises. For air leaks secure hoses and connections. For odd noises, find cause and repair before proceeding. This kit will function identically to the factory system except for being louder and much more responsive.

2. Test drive the vehicle. Listen for odd noises or rattles and fix as necessary.

3. If road test is fine, you can now enjoy the added power and performance from your kit.

4. K&N Engineering, Inc., requires cleaning the intake system's air filter element every 100,000 miles. When used in dusty or off-road environments, our filters will require cleaning more often. We recommend that you visually inspect your filter once every 25,000 miles to determine if the screen is still visible. When the screen is no longer visible some place on the filter element, it is time to clean it. To clean and re-oil, purchase our filter Recharger® service kit, part number 99-5050 or 99-5000 and follow the easy instructions.

INTAKE SYSTEMS FOR VEHICLES LISTED ARE 50 STATE LEGAL. SEE KNFILTERS.COM FOR CARB STATUS ON EACH PART FOR A SPECIFIC VEHICLE.

• 1455 CITRUS ST., P.O. BOX 1329, RIVERSIDE, CA., U.S.A. 92502 • TECH SERVICE 800-858-3333 • FAX 951-826-4001
• e-mail: tech@knfilters.com® • WWW: http://www.knfilters.com®

175230A
11/20/19

trailfortress.com/k-n-performance-air-intake-system-57-1571