K&N 50-9036 Installation Instructions

NextGen Cold Air Intake for Toyota Tundra & Sequoia

Part number: 50-9036

trailfortress.com/k-n-nextgen-cold-air-intake-toyota-tundra-v8-5-7l-f-i-50-9036

Scan for fitment, price and install help

INSTALLATION INSTRUCTIONS

Not legal for sale or use in California on any pollution controlled motor vehicle.

50-9036
TOYOTA
2012-21 Tundra
2012-21 Sequoia
V8-5.7L

TOOLS NEEDED:

11/16” Wrench
3mm Allen Wrench
4mm Allen Wrench
10mm Socket
5/16” nut driver
Extension
Flat Blade Screwdriver
Phillips Screwdriver
Ratchet

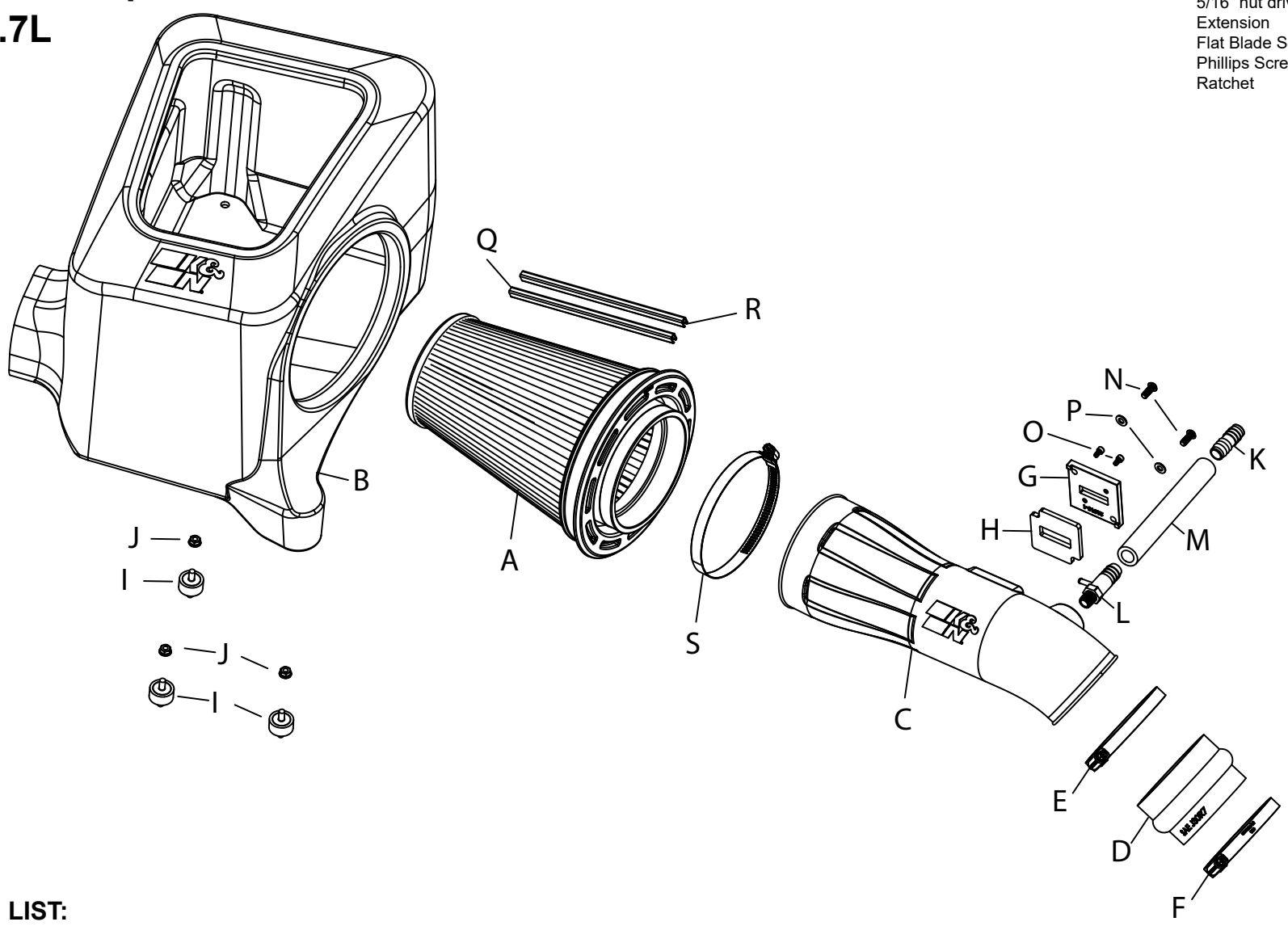

PARTS LIST:

	Description	Qty.	Part #		Description	Qty.	Part #		Description	Qty.	Part #
A	AIR FILTER	1	RU-5302	G	ADAPTOR; MAF SENSOR	1	21515-1	M	HOSE; 5/8”ID X 5”L	1	08538
B	AIR BOX	1	087633	H	GASKET; PORON	1	09069	N	BOLT; M6 X 1 X 16MM	2	07730
C	TUBE	1	087634	I	STUD; M6-1.00 RUBBER	3	07027	O	BOLT; M4-.7 X 8MM	2	07733
D	HOSE; HUMP 3.5”ID	1	08639	J	NUT; M6, HEX, SERRATED	3	444.460.04	P	WASHER; 6MM FLAT	2	08269
E	HOSE CLAMP; #60 BLK	1	08624KA	K	FITTING; VENT STRT 5/8”	1	08048	Q	CLIP; SNAP-ON, RED	1	088218
F	HOSE CLAMP; #56 BLK	1	08620KA	L	FITTING; 1/4”, DUAL BARB	1	088018	R	CLIP; SNAP-ON, ORANGE	1	088219
								S	HOSE CLAMP; #88 BLK	1	KITHS88K

If you need any assistance please call 1-800-858-3333 to speak with a representative in our Customer Service Center before returning the product.

NOTE: FAILURE TO FOLLOW INSTALLATION INSTRUCTIONS AND NOT USING THE PROVIDED HARDWARE MAY DAMAGE THE INTAKE TUBE, THROTTLE BODY AND ENGINE.

TO START:

1. Turn off the ignition and disconnect the negative battery cable.
NOTE: Disconnecting the negative battery cable erases pre-programmed electronic memories. Write down all memory settings before disconnecting the negative battery cable. Some radios will require an anti-theft code to be entered after the battery is reconnected. The anti-theft code is typically supplied with your owner’s manual. In the event your vehicles anti-theft code cannot be recovered, contact an authorized dealership to obtain your vehicles anti-theft code.



2. Lift the engine cover up and remove it from the vehicle.



3. Disconnect the mass air sensor electrical connection and pull harness away from air box.

Continued INSTALLATION INSTRUCTIONS



4. Disconnect the CCV hose and fuel pressure vent hose from the factory intake tube.



5. Loosen the hose clamps that secure the factory intake tube to the throttle body and air filter housing and remove intake tube.



6. Release the latches that secure the upper air filter housing and remove the housing and factory air filter. Loosen the bolts that secure the lower housing to the inner fender and then remove the lower housing from the vehicle.



7. Install the mass air sensor adapter onto the K&N intake tube as shown using the provided hardware. Be sure to install the adapter in the correct direction as shown in the photo so the sensor is installed in the correct direction.



8. Remove the mass air sensor from the factory housing and install it into the K&N adapter using the provided hardware. Install the provided 1/4npt vent fitting into the K&N intake tube as shown. **Note: With K&N adaptor on the leftside, make sure the smaller port is facing towards you, as in the photo.** Do not over tighten the npt fitting.



9. Install the three rubber mounted studs provided where shown.



10. Install the K&N air filter housing onto the studs and secure with the provided hardware.

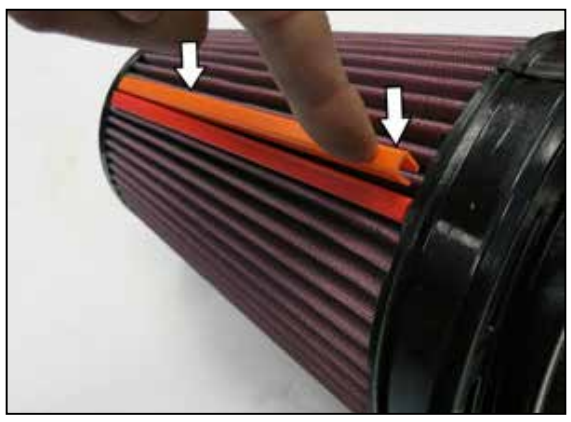

11. Attach the filter clips to the pleats on the air filter align and push down. Passenger side filters, place orange clip on top and red on bottom.



11. Install the K&N air filter into the air filter housing.



13. Install the hose mender into the provided CCV hose as shown.



14. Install the K&N intake tube into the filter and attach to the throttle body using the provided coupler and clamps. Adjust the tube for best fit and secure the clamps. Tighten clamps using 5/16” socket or nut driver.
Note: Do not over tighten clamps.



15. Attach the CCV hose assembly to the factory CCV hose and secure the factory spring clamp, then connect the CCV assembly to the fitting in the K&N intake tube. Connect the fuel pressure vent line to the fitting as shown.



16. Reconnect the mass air sensor electrical connection.



17. Install the engine cover.



18. Reconnect the vehicle's negative battery cable. Double check to make sure everything is tight and properly positioned before starting the vehicle.

19. It will be necessary for all K&N® high flow intake systems to be checked periodically for realignment, clearance and tightening of all connections.
Failure to follow the above instructions or proper maintenance may void warranty.

ROAD TESTING:

1. Start the engine with the transmission in neutral or park, and the parking brake engaged. Listen for air leaks or odd noises. For air leaks secure hoses and connections. For odd noises, find cause and repair before proceeding. This kit will function identically to the factory system except for being louder and much more responsive.

2. Test drive the vehicle. Listen for odd noises or rattles and fix as necessary.

3. If road test is fine, you can now enjoy the added power and performance from your kit.

4. K&N Engineering, Inc., requires cleaning the intake system's air filter element every 100,000 miles. When used in dusty or off-road environments, our filters will require cleaning more often. We recommend that you visually inspect your filter once every 25,000 miles to determine if the screen is still visible. When the screen is no longer visible some place on the filter element, it is time to clean it. To clean and re-oil, purchase our filter Recharger® service kit, part number 99-5050 or 99-5000 and follow the easy instructions.

trailfortress.com/k-n-nextgen-cold-air-intake-toyota-tundra-v8-5-7l-f-i-50-9036