TRAIL FORTRESS

BUILT FOR THE TRAIL. CHECKED FOR YOUR TRUCK.

K&N 50-3110D Installation Instructions

NextGen Dryflow Intake for Silverado 1500 & Escalade

Part number: 50-3110D

trailfortress.com/k-n-nextgen-dryflow-cold-air-intake-chevrolet-silverado-1500-v8-5-50-3110d

Scan for fitment, price and install help

INSTALLATION INSTRUCTIONS

Legal for use in all 50 states.

50-3110D
CHEVROLET / GMC / CADILLAC
2019-25 Silverado / Sierra
2021-25 Tahoe / Yukon
2021-25 Suburban / Escalade
V8-5.3L / 6.2L

NOTE: This kit was not designed to fit vehicles with a body lift.

TOOLS NEEDED:

Phillips Screwdriver
Flat Blade Screwdriver
Ratchet
Extension
10mm Deep Socket
3mm Allen Key
4mm Allen Key
t10 Torx
t20 Torx
Pick
13/16” Wrench
5/16” Socket / Nut Driver

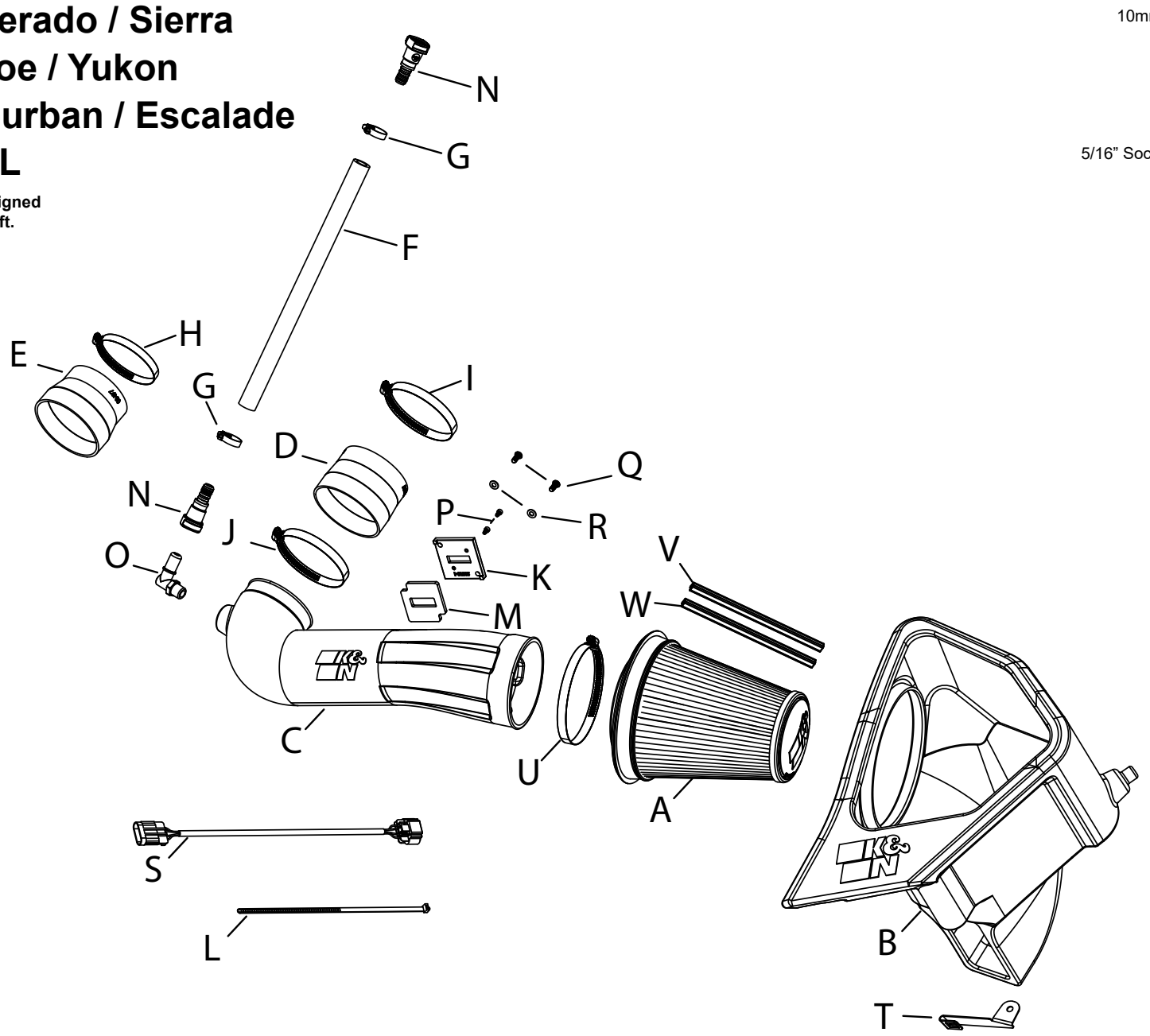

PARTS LIST:

	Description	Qty.	Part #		Description	Qty.	Part #		Description	Qty.	Part #
A	DRY AIR FILTER	1	RU-3151HBK	H	HOSE CLAMP; #56 BLK	1	08620KA	P	BOLT; M4-.7X8MM	2	07733
B	AIRBOX	1	087606	I	HOSE CLAMP; #60 BLK	1	08624KA	Q	BOLT; M6-1X16MM	2	07730
C	TUBE	1	087607	J	HOSE CLAMP; #64 BLK	1	08645KA	R	WASHER; FLAT SS	2	08269
D	HOSE; 4” TO 3-13/16” ID	1	084107	K	ADAPTOR; MAF SENSOR	1	21515-1	S	EXTENSION HARNESS	1	21788
E	HOSE; 4” TO 3.5” ID	1	08497	L	CABLE TIE	1	21590	T	BRACKET; “L”	1	064382
F	HOSE; 5/8” X 15”L	1	5-7015	M	GASKET; PORON	1	09069	U	HOSE CLAMP; #88 BLK	1	KITHS88K
G	HOSE CLAMP; #10 MINI	2	08411	N	FITTING; PCV STRT QD	2	08526	V	CLIP; SNAP-ON, ORANGE	1	088219
				O	FITTING; 90 DEG 3/8NPT	1	082634	W	CLIP; SNAP-ON, RED	1	088218

If you need any assistance please call 1-800-858-3333 to speak with a representative in our Customer Service Center before returning the product.

NOTE: FAILURE TO FOLLOW INSTALLATION INSTRUCTIONS AND NOT USING THE PROVIDED HARDWARE MAY DAMAGE THE INTAKE TUBE, THROTTLE BODY AND ENGINE.

TO START:

1. Turn off the ignition and disconnect the negative battery cable.
NOTE: Disconnecting the negative battery cable erases pre-programmed electronic memories. Write down all memory settings before disconnecting the negative battery cable. Some radios will require an anti-theft code to be entered after the battery is reconnected. The anti-theft code is typically supplied with your owner’s manual. In the event your vehicles anti-theft code cannot be recovered, contact an authorized dealership to obtain your vehicles anti-theft code.



2. Disconnect the mass air sensor electrical connection.



3. Depress the locking tabs and then disconnect the crank case vent line from the intake plenum and valve cover vent port.

Continued INSTALLATION INSTRUCTIONS



4. Loosen the hose clamps that secures the intake plenum to the air filter housing and to the throttle body. Disconnect the plenum connections at the air filter housing and then rotate the plenum counter clockwise to disengage the keyed mount and separate it from the throttle body.
NOTE: The wiring harness anchored to the intake plenum will need to be detached before removing the plenum from the vehicle.



5. Remove the two bolts that secure the hood release arm to the hood latch and then remove the arm.

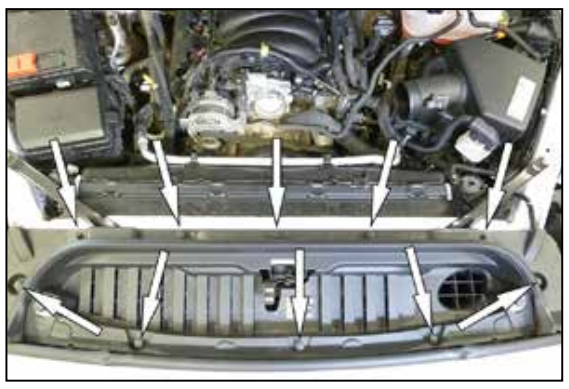

6. Release the ten retaining clips that secure the upper radiator valence and then remove the valence from the vehicle.



7. Remove the plastic retaining clip that secures the fresh air intake duct to the core support, then pull the duct forward to disengage it from the factory air filter housing.



8. Using a small 90° pick or similar tool, release the locking tab that secures the wiring harness bulk connector to the air filter housing and then unhook the connector from the housing.



9. Remove the nut that secures the air filter housing. Save for later install. Unhook the wiring harness from the filter housing and then remove the air filter housing from the vehicle.
NOTE: Go slow and use caution to remove the housing. It is indexed into two holes in the rear with rubber grommets that can fall off easily and be lost. It is a tight fit but will come out without being forced. These grommets and nut will be reused in later steps.
NOTE: K&N Engineering, Inc., recommends that customers do not discard factory air intake.



10. Install the provided quick connect fittings into the provided crank case vent hose and secure with the provided hose clamps. Tighten clamps using 5/16” socket or nut driver.
NOTE: Do not over tighten clamps.



11. Install the provided 90 degree quick connect fitting into the K&N intake tube. **NOTE: The quick connect fitting utilizes 3/8npt threads, thread the fitting in by hand and then tighten one revolution.**



12. Install the provided gasket onto the K&N® MAF sensor adapter. Remove the MAF sensor from the factory housing and install it into the MAF sensor adapter and secure with the provided hardware.

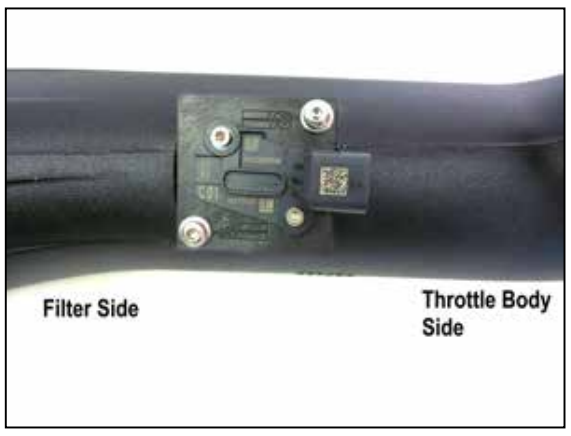

13. Install the MAF sensor assembly into the intake tube and secure using provided hardware. Secure and tighten. **NOTE: Make sure the sensor is going in the correct direction.**



14. Remove the OEM grommmet from the air box and install to the K&N airbox mount..



15. Install the provided bracket to the threaded stud air box mount. Slide the bulk connector to the bracket and secure. The K&N airbox will sit on top of this.



16. Install the airbox into vehicle and position.





17. Make sure the mount is seated in OEM hole location. Install the oem fresh air intake duct into the K&N airbox.



18. Attach the filter clips to the pleats on the air filter align and push down. Driver side filter, place orange clip on top and red on bottom.



19. Install the air filter into the K&N airbox.



20. Install the 08497 hose to the throttle body with clamps provided for 5.3L models. Install the 084107 hose for the 6.2L models. Tighten clamps using 5/16” socket or nut driver.
Note: Do not over tighten clamps.



21. Install the intake tube to vehicle and position to air filter and hose on throttle body.



22. Adjust for proper fit, and tighten all clamps.



23. Install the crank case hose to the engine and intake tube, make sure you hear the click on the PCV connector.





24. Connect the MAF sensor using provided harness extension, and secure harness using cable tie.



25. Reinstall the radiator valence and secure with the ten factory clips.



26. Reinstall the hood release arm and secure with the factory hardware.



27. Reconnect the vehicle’s negative battery cable. Double check to make sure everything is tight and properly positioned before starting the vehicle.

28. It will be necessary for all K&N® high flow intake systems to be checked periodically for realignment, clearance and tightening of all connections. Failure to follow the above instructions or proper maintenance may void warranty.

ROAD TESTING:

1. Start the engine with the transmission in neutral or park, and the parking brake engaged. Listen for air leaks or odd noises. For air leaks secure hoses and connections. For odd noises, find cause and repair before proceeding. This kit will function identically to the factory system except for being louder and much more responsive.

2. Test drive the vehicle. Listen for odd noises or rattles and fix as necessary.

3. If road test is fine, you can now enjoy the added power and performance from your kit.

4. K&N Engineering, Inc., requires cleaning the intake system’s air filter element every 50,000 miles. When used in dusty or off-road environments, our filters will require cleaning more often. We recommend that you visually inspect your filter once every 25,000 miles to determine if the screen is still visible. When the screen is no longer visible some place on the filter element, it is time to clean it. To clean, purchase our Synthetic Filter Cleaner, part number 99-0624 and follow the easy instructions.

trailfortress.com/k-n-nextgen-dryflow-cold-air-intake-chevrolet-silverado-1500-v8-5-50-3110d