TRAIL FORTRESS

BUILT FOR THE TRAIL. CHECKED FOR YOUR TRUCK.

K&N 50-3103 Installation Instructions

NextGen Cold Air Intake for Silverado & Sierra HD

Part number: 50-3103

trailfortress.com/k-n-nextgen-cold-air-intake-chevrolet-silverado-2500-3500-hd-v8-6-50-3103

Scan for fitment, price and install help

INSTALLATION INSTRUCTIONS

Not legal for sale or use in California on any pollution controlled motor vehicle.

50-3103
CHEVROLET / GMC
2020-25 Silverado 2500-3500HD
2020-25 Sierra 2500-3500HD
V8-6.6L FI

NOTE: This kit was not designed to fit vehicles with a body lift.

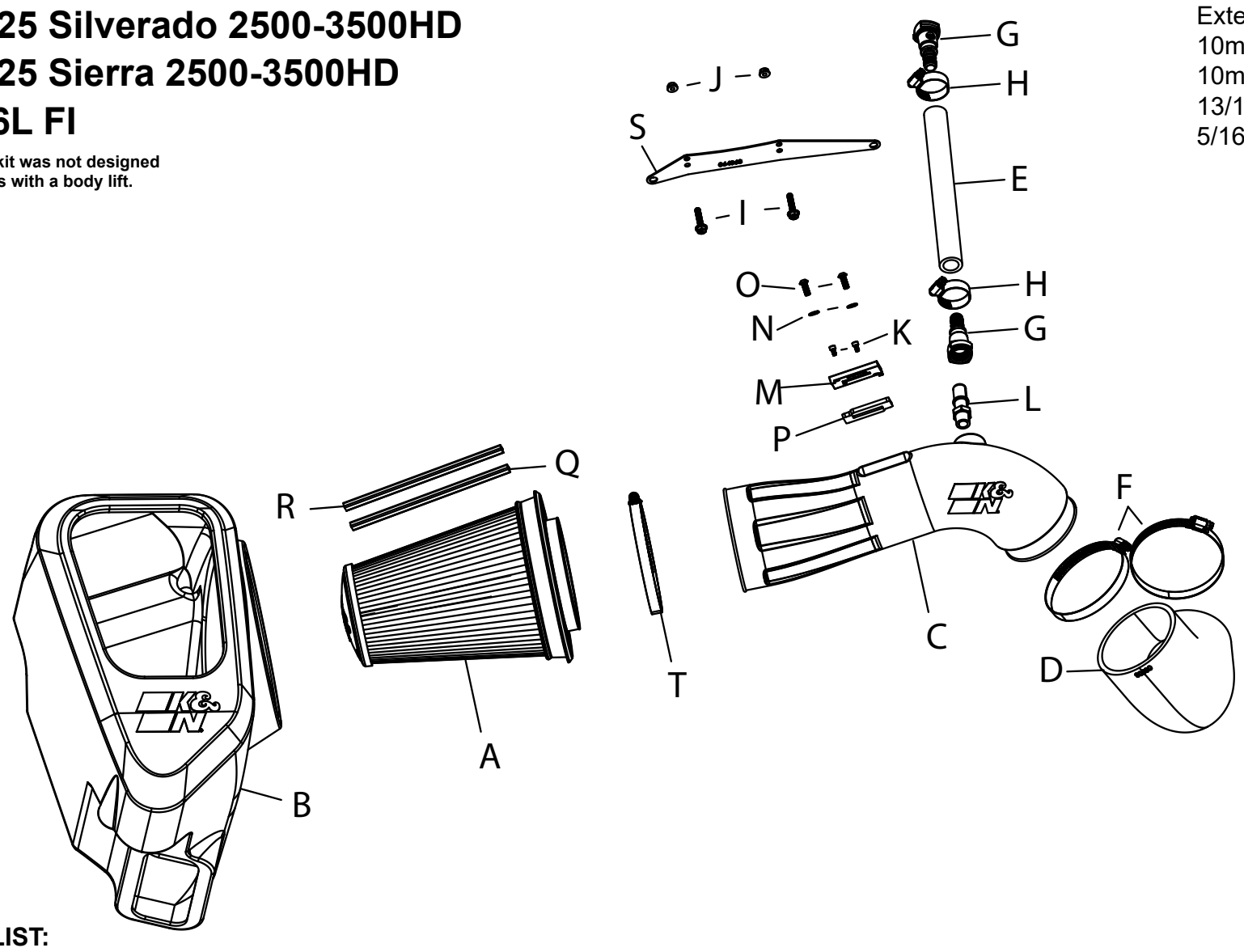

TOOLS NEEDED:

Ratchet
Extension
10mm socket
10mm wrench
13/16” wrench
5/16” nut driver

PARTS LIST:

	Description	Qty.	Part #		Description	Qty.	Part #		Description	Qty.	Part #
A	AIR FILTER	1	RU-5302	H	HOSE CLAMP; #8 MINI	2	08410	O	BOLT; M6 X 1 X 16MM	2	07730
B	AIRBOX	1	087638	I	BOLT; M6-1 X 30, HEX	2	1-1016	P	GASKET; PORON	1	09069
C	TUBE	1	087639	J	NUT; M6, HEX, SERRATED	2	444.460.04	Q	CLIP; SNAP-ON-RED	1	088218
D	HOSE; 4”ID, 90 DEG	1	08503	K	BOLT; M4-.7 X 8MM	2	07733	R	CLIP; SNAP-ORANGE	1	088219
E	HOSE; 5/8"ID X 13"L	1	08602	L	FITTING; 3/8NPT QC	1	82637-1	S	BRACKET; HEATER HOSE MNT	1	064363
F	HOSE CLAMP; #64 BLK	2	08645KA	M	ADAPTOR; MAF SENSOR	1	21515-1	T	HOSE CLAMP; #88 BLK	1	KITHS88K
G	FITTING; STRT PCV QD	2	08526	N	WASHER; 6MM FLAT	2	08269				

If you need any assistance please call 1-800-858-3333 to speak with a representative in our Customer Service Center before returning the product.

NOTE: FAILURE TO FOLLOW INSTALLATION INSTRUCTIONS AND NOT USING THE PROVIDED HARDWARE MAY DAMAGE THE INTAKE TUBE, THROTTLE BODY AND ENGINE.

TO START:

1. Turn off the ignition and disconnect the negative battery cable.
NOTE: Disconnecting the negative battery cable erases pre-programmed electronic memories. Write down all memory settings before disconnecting the negative battery cable. Some radios will require an anti-theft code to be entered after the battery is reconnected. The anti-theft code is typically supplied with your owner’s manual. In the event your vehicles anti-theft code cannot be recovered, contact an authorized dealership to obtain your vehicles anti-theft code.



2. Separate the coolant pipe from the rear of the intake plenum by disconnecting the retaining clips from the plenum.



3. Push in the locking tabs on the CCV quick connect fittings and then remove the CCV hose assembly from the vehicle.

Continued INSTALLATION INSTRUCTIONS



4. Loosen the hose clamp securing the intake plenum to the air filter housing. Disconnect the mass air sensor electrical connection.



5. Loosen the hose clamp that secures the intake tube to the throttle body. Remove the intake plenum from the vehicle.



6. Remove the seven bolts that secure the upper air filter housing to the lower and then remove the upper housing and air filter from the vehicle.



7. Remove the nut that secures the lower air filter housing and then lift the lower housing up to dislodge it from the mounting grommets and remove it from the vehicle. NOTE: The nut will be reused in the next step.



8. Disconnect the wiring harness from the intake manifold.



9. Install the provided mounting bracket onto the intake manifold using the provided hardware.



10. Secure the wiring harness and coolant pipe to the bracket as shown.



11. Install the K&N air filter housing into the vehicle so the mounting posts insert into the factory mounting grommets. Secure the air box with the factory nut from the previous step.

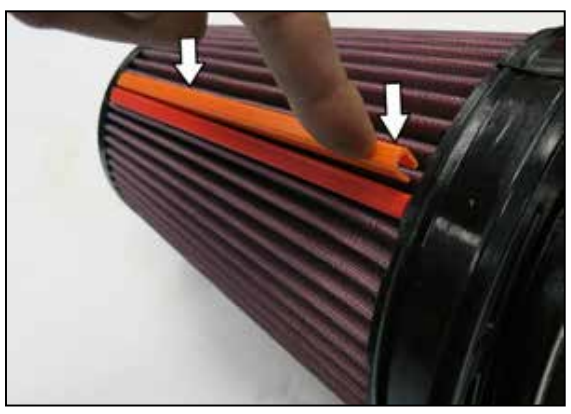

12. Attach the filter clips to the pleats on the air filter align and push down. Passenger side filters, place orange clip on top and red on bottom.



13. Install the K&N air filter into the K&N air filter housing.



14. Install the provided 3/8npt quick connect fitting into the K&N intake tube as shown



15. Remove the mass air sensor from the factory housing. Install the mass air sensor into the provided adapter and secure with the provided hardware. Install the adapter gasket onto the bottom of the adapter.



16. Install the mass air sensor assembly onto the intake tube using the provided hardware as shown. The sensor should be positioned as shown in the photo.



17. Install the elbow coupler onto the K&N intake tube as shown but do not fully tighten the hose clamp.



18. Install the K&N intake tube assembly into the K&N air filter and then connect the coupler to the throttle body, adjust the tube for best fit and then secure with the provided hose clamps.



19. Reconnect the mass air sensor electrical connection.



20. Assemble the provided CCV hose and quick connect couplers with the provided hose clamps.



21. Install the CCV hose assembly onto the valve cover port and quick connect fitting installed into the K&N intake tube.



22. Reconnect the vehicle's negative battery cable. Double check to make sure everything is tight and properly positioned before starting the vehicle.

23. It will be necessary for all K&N® high flow intake systems to be checked periodically for realignment, clearance and tightening of all connections. Failure to follow the above instructions or proper maintenance may void warranty.

ROAD TESTING:

1. Start the engine with the transmission in neutral or park, and the parking brake engaged. Listen for air leaks or odd noises. For air leaks secure hoses and connections. For odd noises, find cause and repair before proceeding. This kit will function identically to the factory system except for being louder and much more responsive.

2. Test drive the vehicle. Listen for odd noises or rattles and fix as necessary.

3. If road test is fine, you can now enjoy the added power and performance from your kit.

4. K&N Engineering, Inc., requires cleaning the intake system's air filter element every 100,000 miles. When used in dusty or off-road environments, our filters will require cleaning more often. We recommend that you visually inspect your filter once every 25,000 miles to determine if the screen is still visible. When the screen is no longer visible some place on the filter element, it is time to clean it. To clean and re-oil, purchase our filter Recharger® service kit, part number 99-5050 or 99-5000 and follow the easy instructions.

trailfortress.com/k-n-nextgen-cold-air-intake-chevrolet-silverado-2500-3500-hd-v8-6-50-3103