TRAIL FORTRESS

BUILT FOR THE TRAIL. CHECKED FOR YOUR TRUCK.

K&N 50-3092 Installation Instructions

NextGen Cold Air Intake for Camaro SS (2016-2024)

Part number: 50-3092

trailfortress.com/k-n-nextgen-cold-air-intake-chevrolet-camaro-ss-v8-6-2l-f-i-50-3092

Scan for fitment, price and install help

INSTALLATION INSTRUCTIONS

Not legal for sale or use in California on any pollution controlled motor vehicle.

50-3092
CHEVROLET
2016-24 CAMARO SS
V8-6.2L

NOTE: This kit was not designed to fit vehicles with a body lift.

TOOLS NEEDED:

Extension
Ratchet
T45 torx
T20 torx
Pliers
8mm socket
10mm socket
3mm allen key
4mm allen key
Adjustable wrench
5/16” Socket / Nut Driver

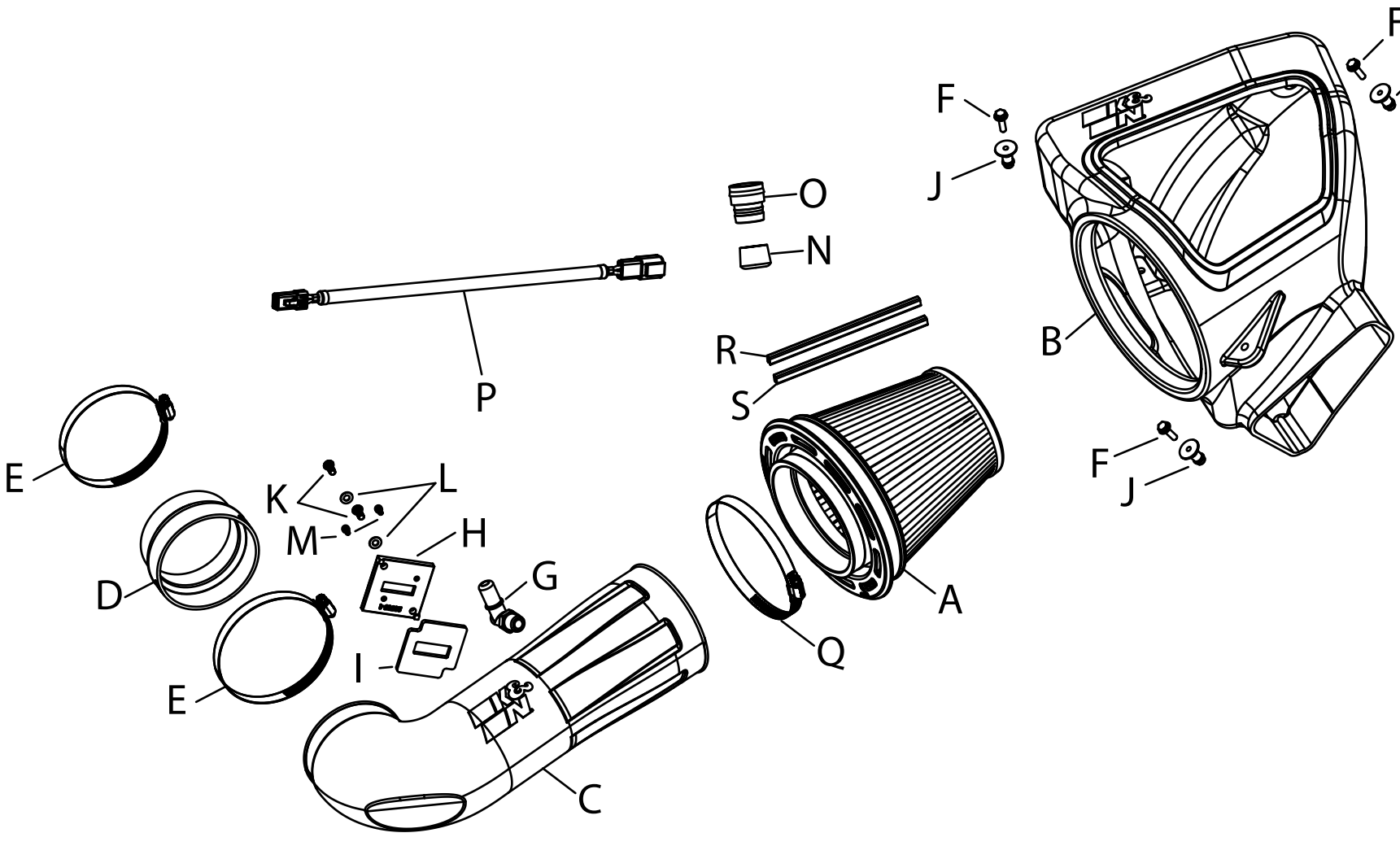

PARTS LIST:

	Description	Qty.	Part #		Description	Qty.	Part #		Description	Qty.	Part #
A	AIR FILTER	1	RU-5303	G	FITTING; 3/8NPT 90DEG	1	082634	M	BOLT; M4-0.07 8MM CAP, SS	2	07733
B	AIRBOX	1	087622	H	ADAPTOR; MAF SENSOR	1	21515-1	N	CAPLUG	1	08246
C	TUBE	1	087623	I	GASKET; PORON	1	09069	O	FITTING; QUICK CONNECT	1	088012
D	HOSE; 3.81”ID X 4.25”ID	1	084201	J	MOUNT; NYLON AIRBOX	3	8-186-1	P	EXTENSION HARNESS	1	21786
E	HOSE CLAMP; #64 BLACK	2	08645KA	K	BOLT; M6X1X16MM, SS	2	07730	Q	HOSE CLAMP; #88 BLACK	1	KITHS88K
F	BOLT; M6 X 1 X 20, HEX	3	1-2038	L	WASHER; 6MM FLAT	2	08269	R	CLIP; SNAP-ON, RED	1	088222
								S	CLIP; SNAP-ON, ORANGE	1	088223

If you need any assistance please call 1-800-858-3333 to speak with a representative in our Customer Service Center before returning the product.

NOTE: FAILURE TO FOLLOW INSTALLATION INSTRUCTIONS AND NOT USING THE PROVIDED HARDWARE MAY DAMAGE THE INTAKE TUBE, THROTTLE BODY AND ENGINE.

TO START:

1. Turn off the ignition and disconnect the negative battery cable.
NOTE: Disconnecting the negative battery cable erases pre-programmed electronic memories. Write down all memory settings before disconnecting the negative battery cable. Some radios will require an anti-theft code to be entered after the battery is reconnected. The anti-theft code is typically supplied with your owner’s manual. In the event your vehicles anti-theft code cannot be recovered, contact an authorized dealership to obtain your vehicles anti-theft code.



2. Disconnect the mass air sensor electrical connection and the CCV tube connection on the factory intake tube.



3. Release the spring clamp and then disconnect the sound tube from the factory intake tube.



4. Loosen the hose clamp that secures the factory intake tube to the throttle body.



5. Disconnect the sound tube from the factory air filter housing.



6. Remove the complete factory intake system from the vehicle.





7. Remove the two bolts that secure the sound drum to the engine, then disconnect the sound tube quick connection and remove the complete sound tube assembly. **Note: One of the sound drum bolts and crush washer grommet will be reinstalled. This will secure the ground strap to the engine in the next step.**



8. Resecure the engine ground with the factory sound drum mounting bolt and crush washer.



9. Assemble the provided quick connect union and cap as shown.



10. Install the quick connect/cap assembly into the remaining sound tube.



11. Install the provided 90 degree quick connect fitting into the K&N intake tube. Install the provided mass air sensor adapter onto the K&N intake tube using the provided hardware and gasket. **Note: The quick connect fitting utilizes 3/8npt threads, thread the fitting in by hand and then tighten one revolution. Be sure to install the mass air sensor adapter in the correct orientation as shown.**



12. Remove the mass air sensor from the factory housing and install it into the K&N adapter using the provided hardware.



13. Install the provided mounting studs onto the K&N air filter housing using the provided hardware.



14. Install the K&N air filter housing into the vehicle so the studs insert into the factory grommets.



15. Install the provided coupler onto the throttle body with the provided hose clamps. Tighten clamps using 5/16” socket or nut driver.
Note: Do not over tighten clamps.

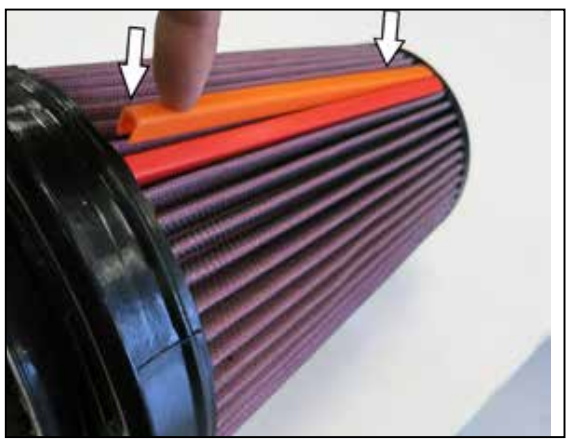

16. Attach the filter clips to the pleats on the air filter align and push down. Driver side filter, place orange clip on top and red on bottom.



17. Install the K&N air filter into the K&N air filter housing.



18. Install the K&N intake tube into the air filter and then onto the coupler at the throttle body, adjust the tube for best fit and secure with the provided hose clamps. Tighten clamps using 5/16” socket or nut driver. **Note: Do not over tighten clamps.**



19. Using provided harness extension, reconnect the mass air sensor electrical connection and the CCV hose connection to the fitting installed into the intake tube.
Note: You can place the harness behind the crank case line or under engine cover.



20. Reconnect the vehicle’s negative battery cable. Double check to make sure everything is tight and properly positioned before starting the vehicle.

21. It will be necessary for all K&N® high flow intake systems to be checked periodically for realignment, clearance and tightening of all connections.
Failure to follow the above instructions or proper maintenance may void warranty.

ROAD TESTING:

1. Start the engine with the transmission in neutral or park, and the parking brake engaged. Listen for air leaks or odd noises. For air leaks secure hoses and connections. For odd noises, find cause and repair before proceeding. This kit will function identically to the factory system except for being louder and much more responsive.

2. Test drive the vehicle. Listen for odd noises or rattles and fix as necessary.

3. If road test is fine, you can now enjoy the added power and performance from your kit.

4. K&N Engineering, Inc., requires cleaning the intake system’s air filter element every 100,000 miles. When used in dusty or off-road environments, our filters will require cleaning more often. We recommend that you visually inspect your filter once every 25,000 miles to determine if the screen is still visible. When the screen is no longer visible some place on the filter element, it is time to clean it. To clean and re-oil, purchase our filter Recharger® service kit, part number 99-5050 or 99-5000 and follow the easy instructions.

trailfortress.com/k-n-nextgen-cold-air-intake-chevrolet-camaro-ss-v8-6-2l-f-i-50-3092