TRAIL FORTRESS

BUILT FOR THE TRAIL. CHECKED FOR YOUR TRUCK.

K&N 50-3070 Installation Instructions

NextGen Cold Air Intake for GM Trucks & SUVs V8

Part number: 50-3070

trailfortress.com/k-n-nextgen-cold-air-intake-chevrolet-silverado-1500-v8-50-3070

Scan for fitment, price and install help

INSTALLATION INSTRUCTIONS

Not legal for sale or use in California on any pollution controlled motor vehicle.

50-3070
CADILLAC / CHEVROLET / GMC
2009-14 Escalade ESV / EXT
V8-6.2L
2009-13 Avalanche
V8-5.3L / 6.0L
2009-13 Silverado 1500
V8-4.8L / 5.3L / 6.2L
2009-14 Suburban
V8-5.3L / 6.0L
2009-14 Tahoe
V8-4.8L / 5.3L / 6.2L
2009-14 Yukon, Denali / Denali XL / XL 1500
V8-4.8L / 5.3L / 6.2L
2009-13 Sierra, Denali 1500
V8-4.8L / 5.3L / 6.2L

TOOLS NEEDED:

Flat Blade Screwdriver
9/16"" Wrench
10mm Socket
Extension
Ratchet
T15 Torx
4mm Allen Key
3mm Allen Key
5/16" Socket / Nut Driver

NOTE: EXCLUDES HYBRID MODELS

NOTE: This kit was not designed to fit vehicles with a body lift.

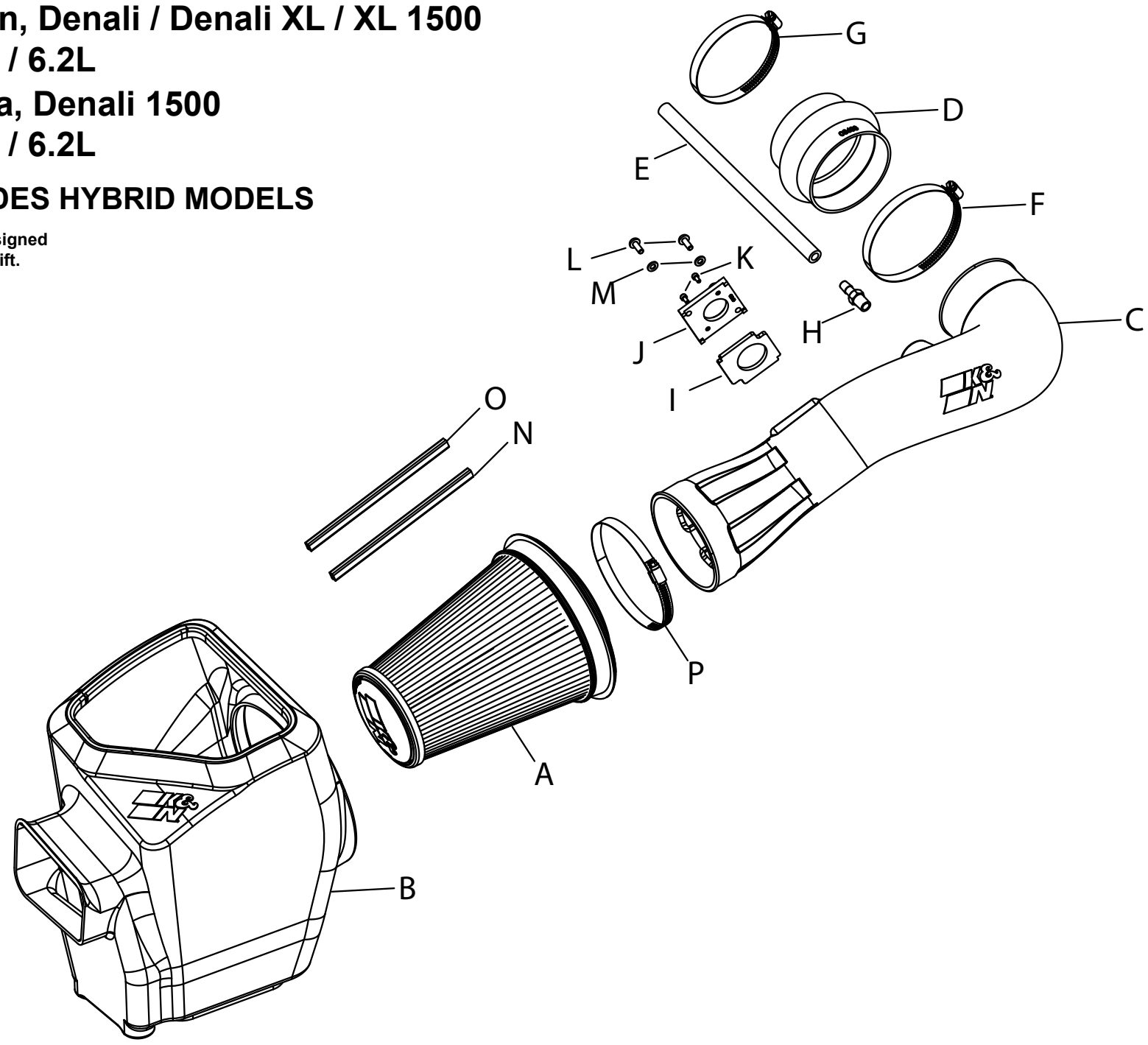

PARTS LIST:

	Description	Qty.	Part #		Description	Qty.	Part #		Description	Qty.	Part #
A	AIR FILTER	1	RU-5302	F	HOSE CLAMP; #72 BLK	1	08671KA	K	BOLT; M4-.7 X 8MM	2	07733
B	AIR BOX	1	087608	G	HOSE CLAMP; #64 BLK	1	08645KA	L	BOLT; M6-1 X 16MM	2	07730
C	TUBE	1	087629	H	VENT; 3/8"HOSE, 1/4"NPT	1	08047	M	WASHER; 6MM FLAT	2	08269
D	HOSE; HUMP 4"ID TO 4.19"ID	1	08633	I	GASKET; PORON	1	09077	N	CLIP; FILTER RED	1	088218
E	HOSE; 3/8"ID X 12"L	1	08412	J	ADAPTOR; MAF SENSOR	1	09403	O	CLIP; FILTER ORANGE	1	088219
								P	HOSE CLAMP; #88 BLK	1	KITHS88K

If you need any assistance please call 1-800-858-3333 to speak with a representative in our Customer Service Center before returning the product.

NOTE: FAILURE TO FOLLOW INSTALLATION INSTRUCTIONS AND NOT USING THE PROVIDED HARDWARE MAY DAMAGE THE INTAKE TUBE, THROTTLE BODY AND ENGINE.

Continued INSTALLATION INSTRUCTIONS

TO START:

1. Turn off the ignition and disconnect the negative battery cable.

NOTE: Disconnecting the negative battery cable erases pre-programmed electronic memories. Write down all memory settings before disconnecting the negative battery cable. Some radios will require an anti-theft code to be entered after the battery is reconnected. The anti-theft code is typically supplied with your owner's manual. In the event your vehicles' anti-theft code cannot be recovered, contact an authorized dealership to obtain your vehicles anti-theft code.



2. Disconnect the mass air electrical connection.



3. Lift up on the engine cover and remove as shown.



4. Unhook the radiator hose mount from the intake tube.

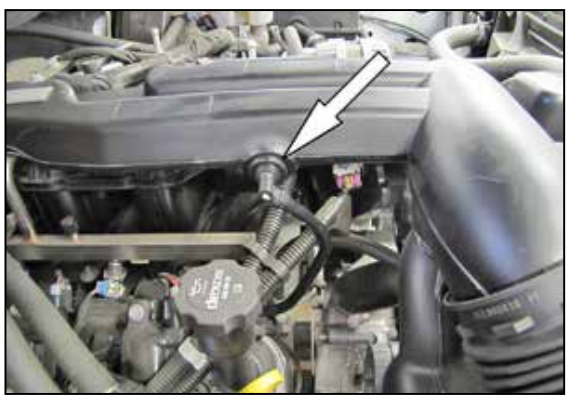

5. Unhook the crankcase vent line from the intake tube plenum as shown.



6. Loosen the hose clamps which secure the stock intake tube, then remove the intake tube from the vehicle.



7. Rotate the crankcase vent line counter clockwise on the valve cover port, and then release the locking tab and remove the crankcase vent line from the valve cover.



8. Pull firmly upward to release the air cleaner assembly from the mounting tray grommets. Then remove the assembly as shown.

NOTE: K&N recommends that customers do not discard factory air intake.



9. Remove the two screws securing the mass air sensor to the air box and then remove the mass air sensor from the air box as shown.

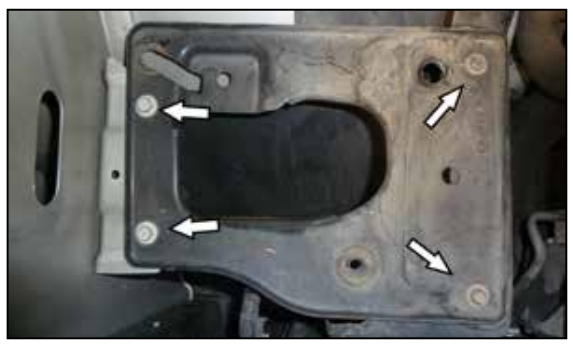

10. Remove the OEM air box bracket, and save 3 bolts for the K&N air box install.



11. install the K&N air box and secure using the 3 bolts from previous step.



12. Attach the filter clips to the pleats on the air filter align and push down. Passenger side filters, place orange clip on top and red on bottom.



13. Install the air fiter into the K&N air box.



14. Install the hump hose with clamps to the throttle body. Do not tighten.



15. Install the provided ¼" NPT fitting into the K&N intake tube as shown.

NOTE: NPT fittings are easy to cross thread. Install the vent fitting "hand" tight, then turn it two complete turns with a 9/16" wrench.



16. Install the MAF sensor assembly into the K&N intake tube and secure with the provided hardware like image shown above.



17. Now install the intake tube assembly and position to the air box and throttle body. Tighten clamps using 5/16” socket or nut driver.
Note: Do not over tighten clamps.



18. Re-connect the MAF sensor harness.



19. Connect the provided 3/8” crank case hose to the engine fitting and fitting on intake tube.



20. Re-install the engine cover.



21. Reconnect the vehicle’s negative battery cable. Double check to make sure everything is tight and properly positioned before starting the vehicle.

22. It will be necessary for all K&N® high flow intake systems to be checked periodically for realignment, clearance and tightening of all connections. Failure to follow the above instructions or proper maintenance may void warranty.

ROAD TESTING:

1. Start the engine with the transmission in neutral or park, and the parking brake engaged. Listen for air leaks or odd noises. For air leaks secure hoses and connections. For odd noises, find cause and repair before proceeding. This kit will function identically to the factory system except for being louder and much more responsive.

2. Test drive the vehicle. Listen for odd noises or rattles and fix as necessary.

3. If road test is fine, you can now enjoy the added power and performance from your kit.

4. K&N Engineering, Inc., requires cleaning the intake system’s air filter element every 100,000 miles. When used in dusty or off-road environments, our filters will require cleaning more often. We recommend that you visually inspect your filter once every 25,000 miles to determine if the screen is still visible. When the screen is no longer visible some place on the filter element, it is time to clean it. To clean and re-oil, purchase our filter Recharger® service kit, part number 99-5050 or 99-5000 and follow the easy instructions.

trailfortress.com/k-n-nextgen-cold-air-intake-chevrolet-silverado-1500-v8-50-3070