TRAIL FORTRESS

BUILT FOR THE TRAIL. CHECKED FOR YOUR TRUCK.

K&N 50-2617 Installation Instructions

NextGen Cold Air Intake for Ford F-150 (2021-2026)

Part number: 50-2617

trailfortress.com/k-n-nextgen-cold-air-intake-ford-f150-raptor-v6-2-7l-3-5l-50-2617

Scan for fitment, price and install help

INSTALLATION INSTRUCTIONS

Not legal for sale or use in California on any pollution controlled motor vehicle.

50-2617
FORD
2021-25 F150 2.7L ECOBOOST
2021-25 F150 3.5L ECOBOOST (EXCLUDING POWERBOOST)
2021-25 F150 RAPTOR 3.5L ECOBOOST

NOTE: This kit was not designed to fit vehicles with a body lift.

TOOLS NEEDED:

Ratchet
Extension
7mm Socket
8mm Socket
13mm Socket
Flathead Screwdriver
5/16” Socket / Nut
Driver
Hack Saw

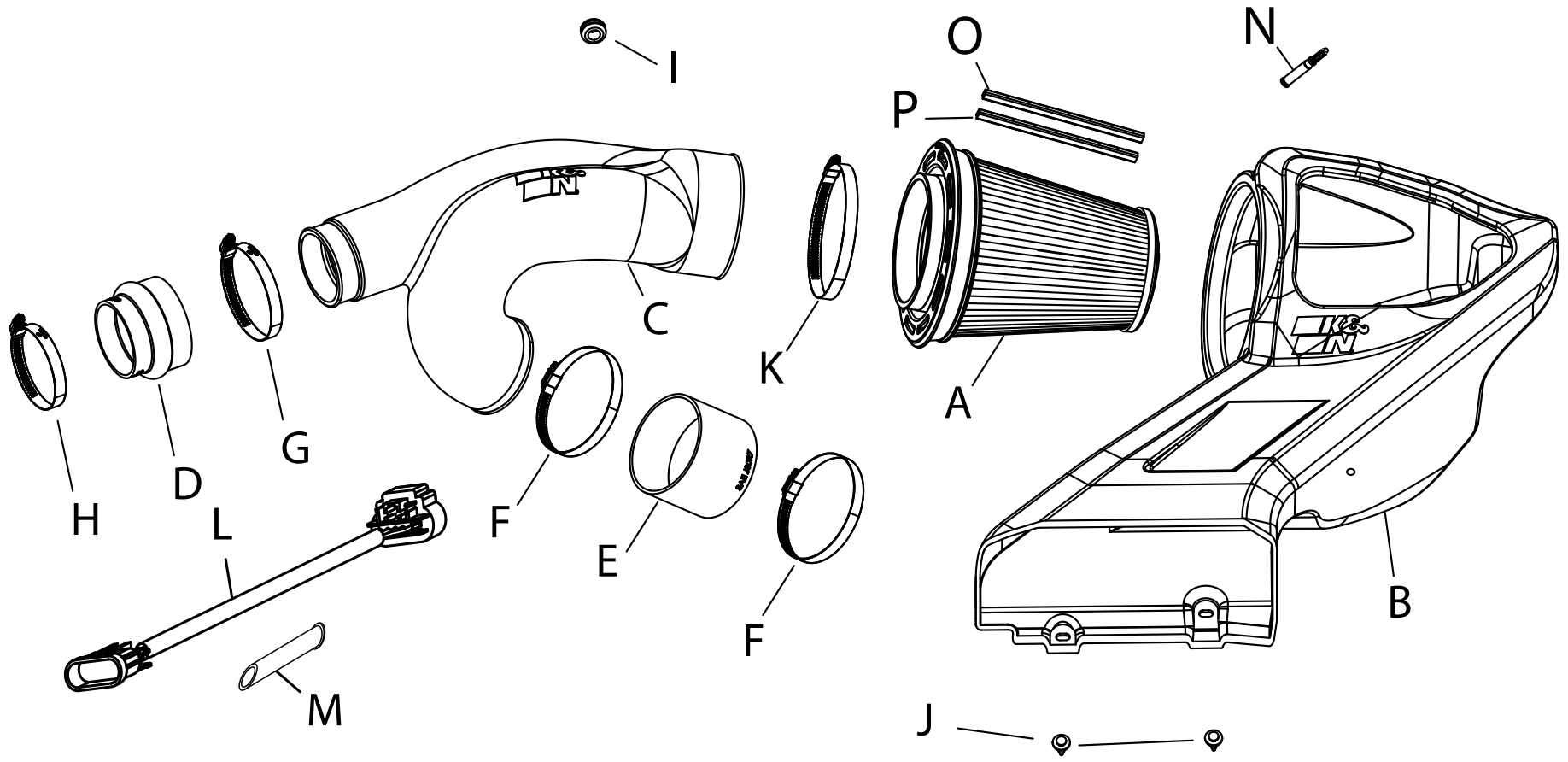

PARTS LIST:

	Description	Qty.	Part #		Description	Qty.	Part #		Description	Qty.	Part #
A	AIR FILTER	1	RU-5301	F	HOSE CLAMP #64 BLACK	2	08645KA	K	HOSE CLAMP #88 BLACK	1	KITHS88K
B	AIRBOX	1	087610	G	HOSE CLAMP #56 BLACK	1	08620KA	L	EXTENSION HARNESS; 11”	1	21783
C	TUBE	1	087611	H	HOSE CLAMP #48 BLACK	1	08601KA	M	INSERT; PCV Q.D.	1	7-284
D	HOSE; HUMP 3.5” TO 3”	1	084079	I	GROMMET; .75GD, 1/2” ID	1	KITGRMT03	N	SUPER GLUE	1	409
E	HOSE; 4”ID X 3”L	1	5-400	J	CLIP; RETAINER	2	KITRETCLIP02	O	CLIP; SNAP-ON, ORANGE	1	088221
								P	CLIP; SNAP-ON, RED	1	088220

If you need any assistance please call 1-800-858-3333 to speak with a representative in our Customer Service Center before returning the product.

NOTE: FAILURE TO FOLLOW INSTALLATION INSTRUCTIONS AND NOT USING THE PROVIDED HARDWARE MAY DAMAGE THE INTAKE TUBE, THROTTLE BODY AND ENGINE.

TO START:

1. Turn off the ignition and disconnect the negative battery cable.
NOTE: Disconnecting the negative battery cable erases pre-programmed electronic memories. Write down all memory settings before disconnecting the negative battery cable. Some radios will require an anti-theft code to be entered after the battery is reconnected. The anti-theft code is typically supplied with your owner’s manual. In the event your vehicles anti-theft code cannot be recovered, contact an authorized dealership to obtain your vehicles anti-theft code.



2. Remove the two mounting pins that secure the factory fresh air intake to the radiator valence panel.



3. Loosen the three hose clamps that secure the factory intake tube.

Continued INSTALLATION INSTRUCTIONS



4. Disconnect the IAT sensor electrical connection and unhook the wiring harness from its mounts.



5. Remove the factory intake tube from the vehicle.



6. Remove the bolt that secures the factory air filter housing to the inner fender and then remove the air filter housing from the vehicle. This bolt will be reused in the next step.



7. Install the K&N air filter housing and secure to the inner fender using the mounting bolt from the previous step.

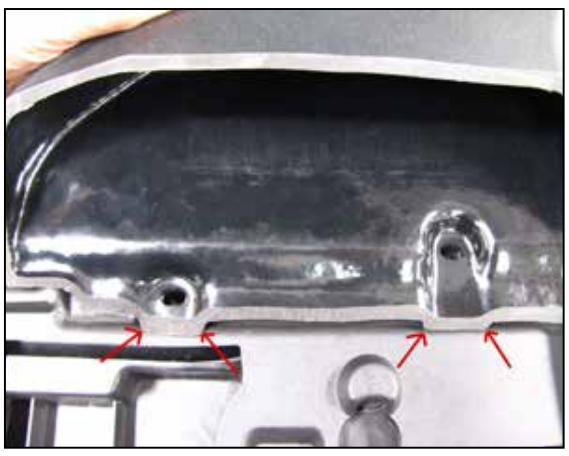

7A. K&N has found that due to vehicle manufacturer inconsistencies between models LARIAT, KING RANCH & Platinum, the K&N air filter housing fresh air duct may not fit sufficiently to allow the push pins to be inserted and lock into position. The extended taps contact the core support cover and hold the fresh air duct up causing a gap. (see photo)



7B. In these cases, it will be necessary to trim the mounting tabs as shown using a hack saw or similar tool.



7C. Once the tabs are trimmed flush with the fresh air duct the air filter housing can be installed back into position, pushed down and the locking pins installed as intended.



8. On 2021 and earlier 3.5L Ecoboost vehicles, Disconnect the CCV connection shown on the drivers side turbo inlet tube. On later 2022 and later model vehicles skip to step #11.



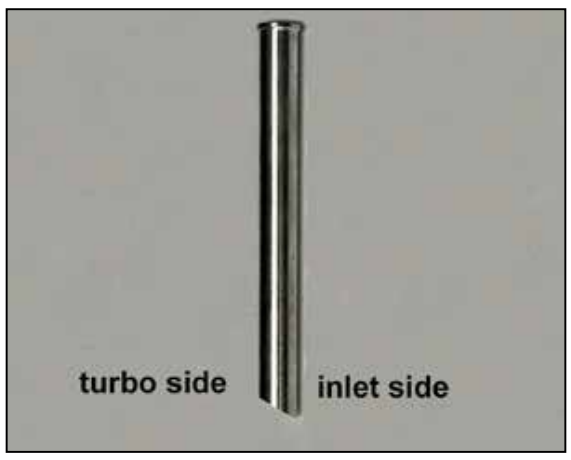

9. Install the provided CCV insert into the driver side inlet tube.
NOTE: The Angled end of the cut needs to be installed with the shorter end towards the turbo and the longer end towards the inlet. Apply two drops of the provided superglue on the bottom of the lip of the insert before installation.



10. Once the insert is slid completely into the fitting reconnect the CCV connection.

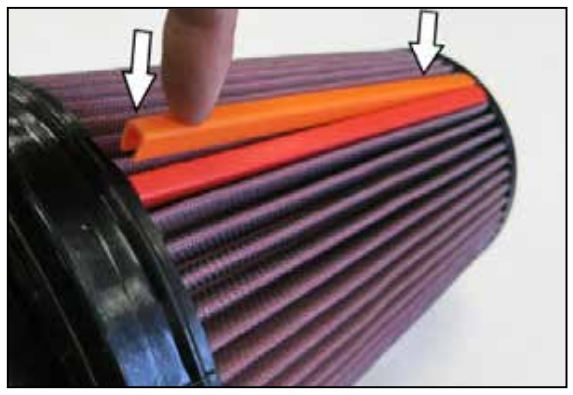

11. Attach the filter clips to the pleats on the air filter align and push down. Driver side filter, place orange clip on top and red on bottom.



12. Install the K&N air filter into the filter housing.



13. Remove the IAT sensor from the factory intake tube.



14. Remove the O-ring from the IAT sensor and then install the sensor into the K&N intake tube using the provided grommet.



15. Install the provided couplers and clamps onto the K&N intake tube as shown but do not tighten the clamps.Tighten clamps using 5/16” socket or nut driver.
Note: Do not over tighten clamps.



16. Install the K&N intake tube into the air filter and align with the turbo inlet tubes. Adjust the assembly for best fit and then tighten all the hose clamps. Tighten clamps using 5/16” socket or nut driver.
Note: Do not over tighten clamps.



17. Reconnect the IAT sensor electrical connection.
NOTE: It maybe necessary to use the included extension harness to connect the IAT sensor.



18. Reconnect the vehicle’s negative battery cable. Double check to make sure everything is tight and properly positioned before starting the vehicle.

19. It will be necessary for all K&N® high flow intake systems to be checked periodically for realignment, clearance and tightening of all connections.
Failure to follow the above instructions or proper maintenance may void warranty.

ROAD TESTING:

1. Start the engine with the transmission in neutral or park, and the parking brake engaged. Listen for air leaks or odd noises. For air leaks secure hoses and connections. For odd noises, find cause and repair before proceeding. This kit will function identically to the factory system except for being louder and much more responsive.

2. Test drive the vehicle. Listen for odd noises or rattles and fix as necessary.

3. If road test is fine, you can now enjoy the added power and performance from your kit.

4. K&N Engineering, Inc., requires cleaning the intake system’s air filter element every 100,000 miles. When used in dusty or off-road environments, our filters will require cleaning more often. We recommend that you visually inspect your filter once every 25,000 miles to determine if the screen is still visible. When the screen is no longer visible some place on the filter element, it is time to clean it. To clean and re-oil, purchase our filter Recharger® service kit, part number 99-5050 or 99-5000 and follow the easy instructions.

trailfortress.com/k-n-nextgen-cold-air-intake-ford-f150-raptor-v6-2-7l-3-5l-50-2617