TRAIL FORTRESS

BUILT FOR THE TRAIL. CHECKED FOR YOUR TRUCK.

K&N 50-2593 Installation Instructions

NextGen Cold Air Intake for Ford Super Duty V8

Part number: 50-2593

trailfortress.com/k-n-nextgen-cold-air-intake-ford-f250-350-v8-6-2l-f-i-50-2593

Scan for fitment, price and install help

INSTALLATION INSTRUCTIONS

Not legal for sale or use in California on any pollution controlled motor vehicle.

50-2593
FORD
2020-2022 F250/350
V8-6.2L

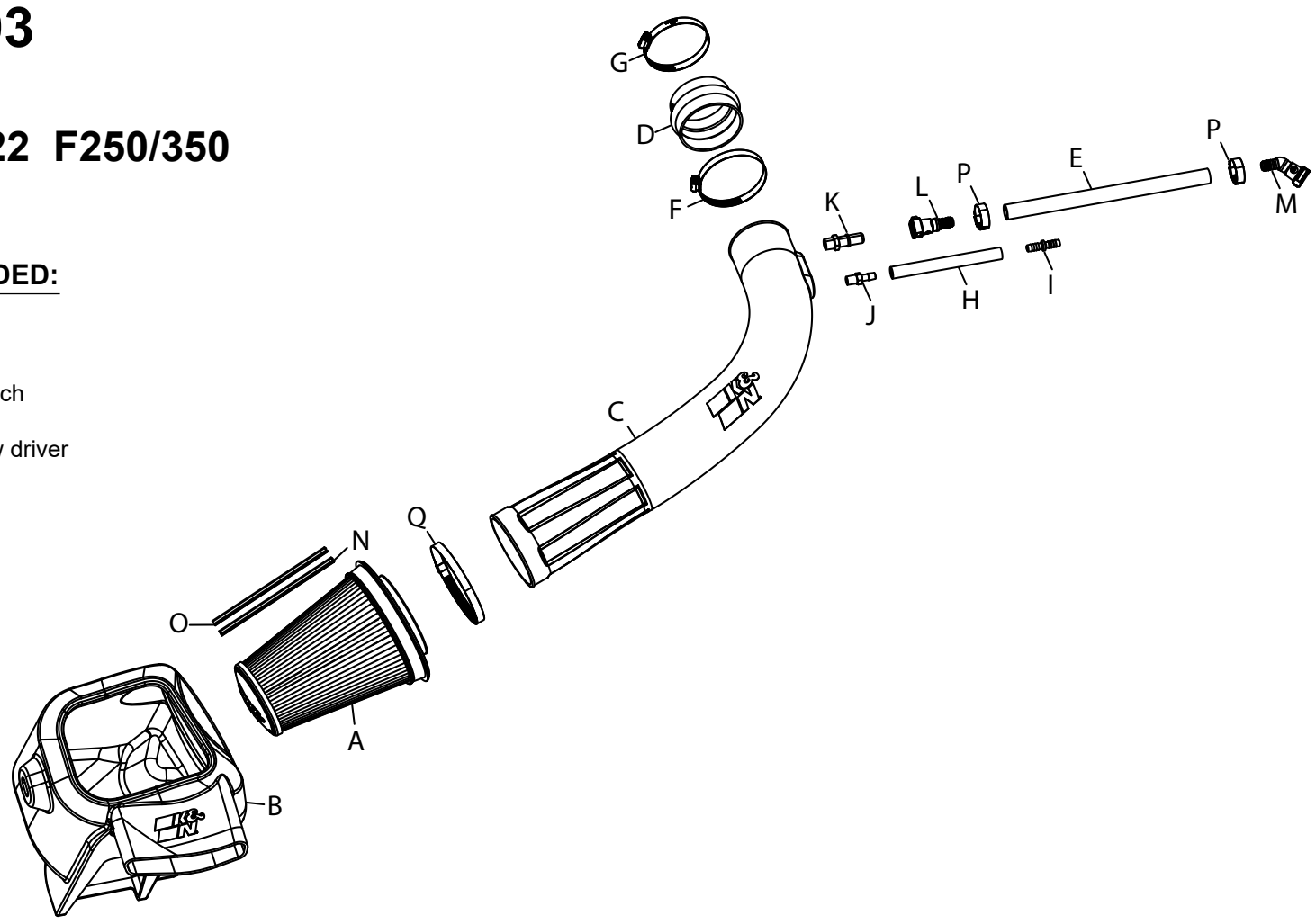

TOOLS NEEDED:

Ratchet
Extension
13mm socket
Adjustable wrench
5/16” nut driver
Flat blade screw driver
Pliers

PARTS LIST:

	Description	Qty.	Part #		Description	Qty.	Part #		Description	Qty.	Part #
A	AIR FILTER	1	RU-5302	G	HOSE CLAMP; #60 BLK	1	08624KA	M	45DEG., QUICK DISCONNECT	1	080025
B	AIRBOX	1	087642	H	HOSE; 3/8”ID X 7”L	1	5-1007	N	CLIP; SNAP-ON, RED	1	088218
C	TUBE	1	084643	I	VENT; 3/8”HOSE UNION	1	08041	O	CLIP; SNAP-ON, ORANGE	1	088219
D	HOSE; HUMP 3.5”ID TO 3.75”	1	08639	J	VENT; 3/8”HOSE, 1/4”NPT	1	08047	P	HOSE CLAMP; #8 MINI	2	08410
E	HOSE; 5/8”ID X 13”L	1	08602	K	QUICK CONNECT TO 3/8NPT	1	82637-1	Q	HOSE CLAMP; #88 BLK	1	KITHS88K
F	HOSE CLAMP; #64 BLK	1	08645KA	L	STRT QUICK DISCONNECT	1	08526				

If you need any assistance please call 1-800-858-3333 to speak with a representative in our Customer Service Center before returning the product.

NOTE: FAILURE TO FOLLOW INSTALLATION INSTRUCTIONS AND NOT USING THE PROVIDED HARDWARE MAY DAMAGE THE INTAKE TUBE, THROTTLE BODY AND ENGINE.

TO START:

1. Turn off the ignition and disconnect the negative battery cable.

NOTE: Disconnecting the negative battery cable erases pre-programmed electronic memories. Write down all memory settings before disconnecting the negative battery cable. Some radios will require an anti-theft code to be entered after the battery is reconnected. The anti-theft code is typically supplied with your owner’s manual. In the event your vehicles anti-theft code cannot be recovered, contact an authorized dealership to obtain your vehicles anti-theft code.



2. Loosen the hose clamp that secures the factory intake tube to the air filter housing.



3. Disconnect the two vent lines from the factory intake plenum.



4. Disconnect the vent line holder from the factory intake plenum.



5. Loosen the hose clamp that secures the intake plenum to the throttle body. Remove the complete intake tube and plenum assembly from the vehicle.



6. Remove the push-pin that secures the fresh air duct to the core support and then remove the duct from the vehicle.



7. Release the three clips that secure the air filter housing lid, tilt the lid back and then remove the lid and factory air filter.



8. Pull up the lower air filter housing to dislodge it from the mounting grommets and then remove it from the vehicle.

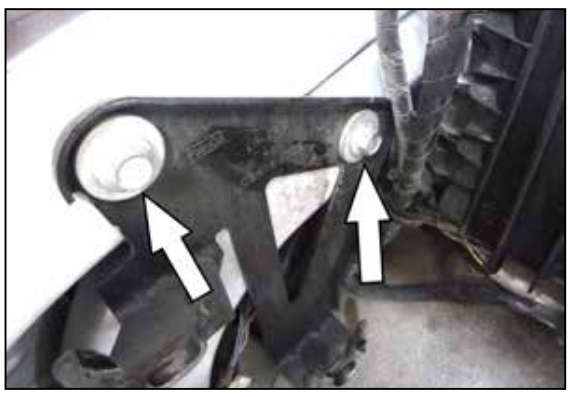

9. Remove the two bolts that secure the factory air filter housing mounting bracket to the inner fender and then remove the bracket from the vehicle.
NOTE: One of the bolts will be reused in the next step.



10. Install the K&N air filter housing and secure with one of the factory bolts from step #9.

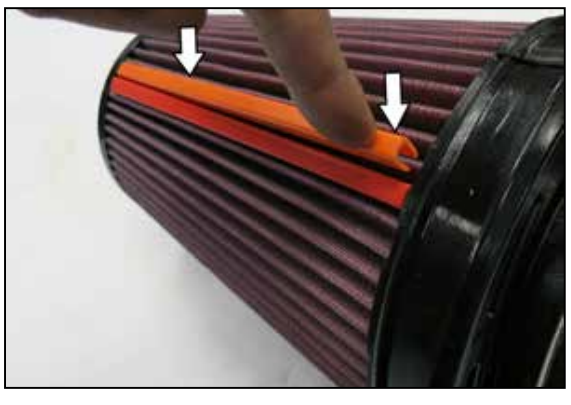

11. Attach the filter clips to the pleats on the air filter align and push down. Passenger side filters, place orange clip on top and red on bottom.



12. Install the K&N air filter into the K&N air filter housing.



13. Install the provided coupler onto the throttle body and secure with the provided hose clamp. Tighten clamp using 5/16” socket or nut driver.
NOTE: Do not over tighten clamps.



14. Install the provided vent fittings into the K&N intake tube as shown.



15. Install the K&N intake tube into the filter and then into the coupler at the throttle body, adjust for best fit and then secure with the provided hose clamps. Tighten clamps using 5/16” socket or nut driver. **NOTE: Do not over tighten clamps.**



16. Install the provided quick connect fittings into the provided CCV hose and secure with the provided hose clamps. Install the union fitting into the EVAP hose.



17. Install the CCV hose assembly onto the valve cover port and then connect to the quick connect fitting installed into the K&N intake tube. Connect the EVAP hose assembly to the factory EVAP hose and then connect to the fitting installed into the K&N tube.



18. Reconnect the vehicle’s negative battery cable. Double check to make sure everything is tight and properly positioned before starting the vehicle.

19. It will be necessary for all K&N® high flow intake systems to be checked periodically for realignment, clearance and tightening of all connections. Failure to follow the above instructions or proper maintenance may void warranty.

ROAD TESTING:

1. Start the engine with the transmission in neutral or park, and the parking brake engaged. Listen for air leaks or odd noises. For air leaks secure hoses and connections. For odd noises, find cause and repair before proceeding. This kit will function identically to the factory system except for being louder and much more responsive.

2. Test drive the vehicle. Listen for odd noises or rattles and fix as necessary.

3. If road test is fine, you can now enjoy the added power and performance from your kit.

4. K&N Engineering, Inc., requires cleaning the intake system’s air filter element every 100,000 miles. When used in dusty or off-road environments, our filters will require cleaning more often. We recommend that you visually inspect your filter once every 25,000 miles to determine if the screen is still visible. When the screen is no longer visible some place on the filter element, it is time to clean it. To clean and re-oil, purchase our filter Recharger® service kit, part number 99-5050 or 99-5000 and follow the easy instructions.

trailfortress.com/k-n-nextgen-cold-air-intake-ford-f250-350-v8-6-2l-f-i-50-2593