TRAIL FORTRESS

BUILT FOR THE TRAIL. CHECKED FOR YOUR TRUCK.

K&N 50-2591 Installation Instructions

Cold Air Intake for Ford F-150 (2015-2025)

Part number: 50-2591

trailfortress.com/k-n-nextgen-cold-air-intake-ford-f150-v8-5-0l-f-i-50-2591

Scan for fitment, price and install help

INSTALLATION INSTRUCTIONS

Not legal for sale or use in California on any pollution controlled motor vehicle.

50-2591
FORD
2015-25 F-150
V8-5.0L

NOTE: This kit was not designed to fit vehicles with a body lift.

TOOLS NEEDED:

Ratchet
Extension
7mm socket
8mm socket
13m socket
flat head screw
9/16” wrench
13/16 wrench
Hack Saw

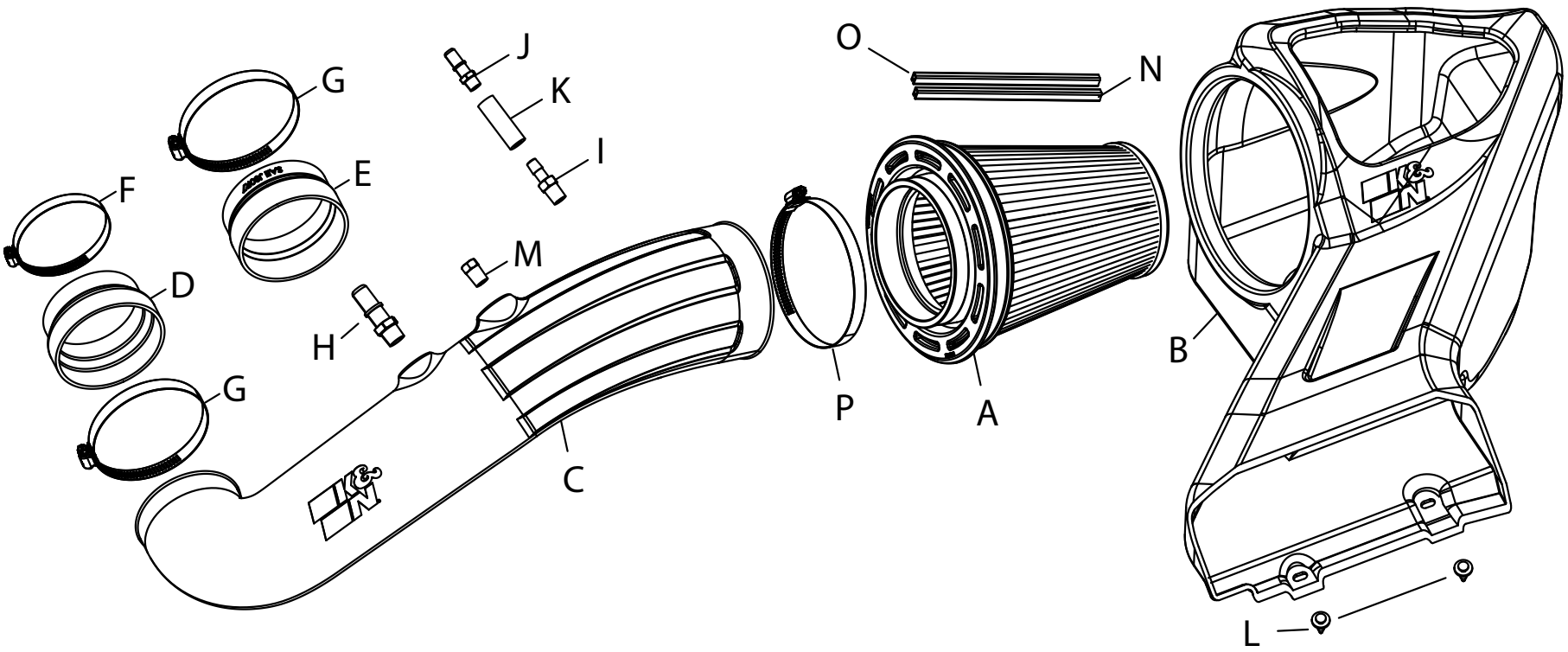

PARTS LIST:

	Description	Qty.	Part #		Description	Qty.	Part #		Description	Qty.	Part #
A	AIR FILTER	1	RU-5301	G	HOSE CLAMP; #64 BLK	2	08645KA	M	PLUG; 1/4” PLASTIC	1	08032
B	AIRBOX	1	087610	H	FITTING; QUICK CONNECT	1	82637-1	N	CLIP; SNAP-ON, RED	1	088220
C	TUBE	1	087632	I	VENT; STRT 3/8” ,1/4” NPT	1	08047	O	CLIP; SNAP-ON, ORANGE	1	088221
D	HOSE; 4” TO 3-13/16”	1	08618	J	VENT; STRT 3/8” BARB QR	1	82631	P	HOSE CLAMP; #88 BLK	1	KITHS88K
E	REDUCER; 4”ID X 3.5”	1	KITRDCR23	K	HOSE; 3/8”IS X 2”L	1	5-1002				
F	HOSE CLAMP; #56 BLK	1	08620KA	L	CLIP; RETAINER NYLON	2	KITRETCLIP02				

If you need any assistance please call 1-800-858-3333 to speak with a representative in our Customer Service Center before returning the product.

NOTE: FAILURE TO FOLLOW INSTALLATION INSTRUCTIONS AND NOT USING THE PROVIDED HARDWARE MAY DAMAGE THE INTAKE TUBE, THROTTLE BODY AND ENGINE.

TO START:

1. Turn off the ignition and disconnect the negative battery cable.
NOTE: Disconnecting the negative battery cable erases pre-programmed electronic memories. Write down all memory settings before disconnecting the negative battery cable. Some radios will require an anti-theft code to be entered after the battery is reconnected. The anti-theft code is typically supplied with your owner’s manual. In the event your vehicles anti-theft code cannot be recovered, contact an authorized dealership to obtain your vehicles anti-theft code.



2. Loosen the hose clamp that secures the factory intake tube to the air filter housing. Loosen the hose clamp that secures the intake tube to the throttle body.





3. Unhook the coolant line and vent lines from the intake tube. ***NOTE: Early models: Disconnect the EVAP vent connection and crank case vent connection. Later models: Disconnect the crank case vent connection only.***



4. Remove the intake tube from the vehicle.



5. Pry up the push-pin locks that secure the fresh air intake duct and remove the pins.

Continued INSTALLATION INSTRUCTIONS



6. Remove the bolt that secures the factory air filter housing to the inner fender. Save bolt for later install.



7. Remove the air filter housing/fresh air intake duct assembly from the vehicle.



8. Install K&N airbox into factory grommet and position. Secure using original bolt from step 6. Secure the front fresh air intake duct using provided push clips.

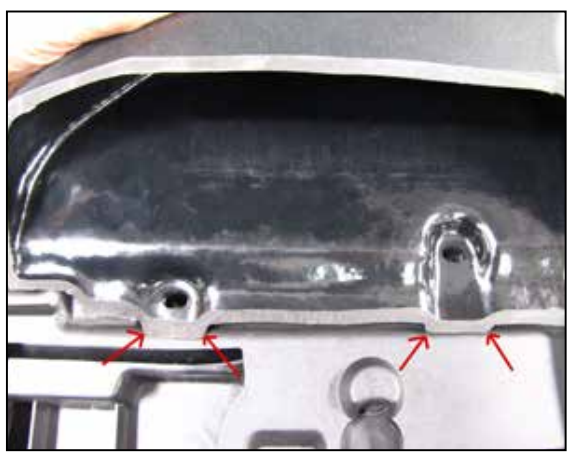

8A. K&N has found that due to vehicle manufacturer inconsistencies between models LARIAT, KING RANCH & Platinum, the K&N air filter housing fresh air duct may not fit sufficiently to allow the push pins to be inserted and lock into position. The extended taps contact the core support cover and hold the fresh air duct up causing a gap. (see photo)

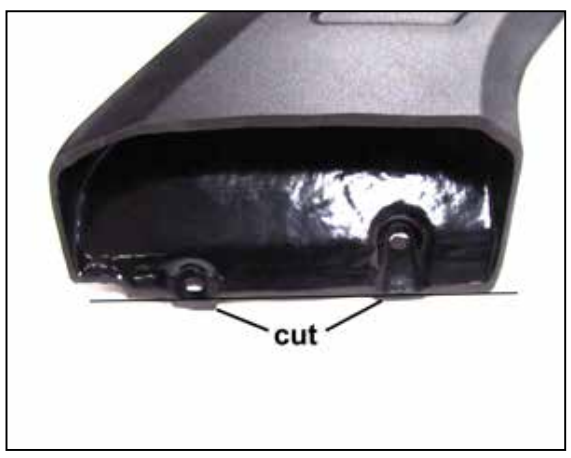

8B. In these cases, it will be necessary to trim the mounting tabs as shown using a hack saw or similar tool.



8C. Once the tabs are trimmed flush with the fresh air duct the air filter housing can be installed back into position, pushed down and the locking pins installed as intended.

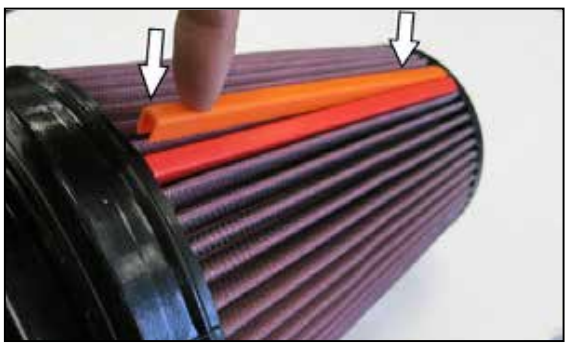

9. Attach the filter clips to the pleats on the air filter align, and push down. Driver side filters, place orange clip on top and red on bottom.



10. Install the air filter into the K&N airbox.





11. Early models: Assemble the 3/8” quick connect and barb fitting with hose like above image. Later models: use provided plastic plug. Install either configuration to the threaded insert on tube. Install the Larger Quick connect 3/8” npt to the threaded insert on intake tube.
NOTE: NPT fittings are easy to cross thread. Install the vent fitting “hand” tight, then turn it two complete turns with a wrench.



12. Attach the provided hose with clamps to the intake tube. Tighten the clamp on the tube only.
NOTE: Verify the throttle body size. Early models will use
KITRDCR23 hose and later models will use 08618 hose.



13. Install the intake tube and position the filter and the throttle body. Tighten clamps using 5/16” socket or nut driver. **Note: Do not over tighten clamps.**



14. Connect the factory CCV hose to the quick connect fitting installed into the K&N intake tube.
NOTE: Early models: Connect the EVAP vent connection.



15. Reconnect the vehicle’s negative battery cable. Double check to make sure everything is tight and properly positioned before starting the vehicle.

16. It will be necessary for all K&N® high flow intake systems to be checked periodically for realignment, clearance and tightening of all connections. Failure to follow the above instructions or proper maintenance may void warranty.

ROAD TESTING:

1. Start the engine with the transmission in neutral or park, and the parking brake engaged. Listen for air leaks or odd noises. For air leaks secure hoses and connections. For odd noises, find cause and repair before proceeding. This kit will function identically to the factory system except for being louder and much more responsive.

2. Test drive the vehicle. Listen for odd noises or rattles and fix as necessary.

3. If road test is fine, you can now enjoy the added power and performance from your kit.

4. K&N Engineering, Inc., requires cleaning the intake system’s air filter element every 100,000 miles. When used in dusty or off-road environments, our filters will require cleaning more often. We recommend that you visually inspect your filter once every 25,000 miles to determine if the screen is still visible. When the screen is no longer visible some place on the filter element, it is time to clean it. To clean and re-oil, purchase our filter Recharger® service kit, part number 99-5050 or 99-5000 and follow the easy instructions.

• 14 Longitude Way., CORONA, CA., 92881., P.O. BOX 77550, CORONA, CA., U.S.A. 92877 • TECH SERVICE 800-858-3333 • FAX 951-826-4001
• e-mail: tech@knfilters.com® • WWW: http://www.knfilters.com®
#19779B
4/14/25

trailfortress.com/k-n-nextgen-cold-air-intake-ford-f150-v8-5-0l-f-i-50-2591