TRAIL FORTRESS

BUILT FOR THE TRAIL. CHECKED FOR YOUR TRUCK.

K&N 50-1598 Installation Instructions

NextGen Cold Air Intake for Ram 1500 (2025-2026)

Part number: 50-1598

trailfortress.com/k-n-nextgen-cold-air-intake-ram-1500-l6-3-0l-tt-50-1598

Scan for fitment, price and install help

INSTALLATION INSTRUCTIONS

Not legal for sale or use in California on any pollution controlled motor vehicle.

50-1598
RAM
2025 1500
L6-3.0L HURRICANE

NOTE: This kit was not designed to fit vehicles with a body lift.

TOOLS NEEDED:

Ratchet
Extension
10mm Socket
13mm Socket
Flathead Screwdriver
Pliers
3mm Allen Key
4mm Allen Key
T20 Torx
Side Cutters
5/16” Socket / Nut Driver

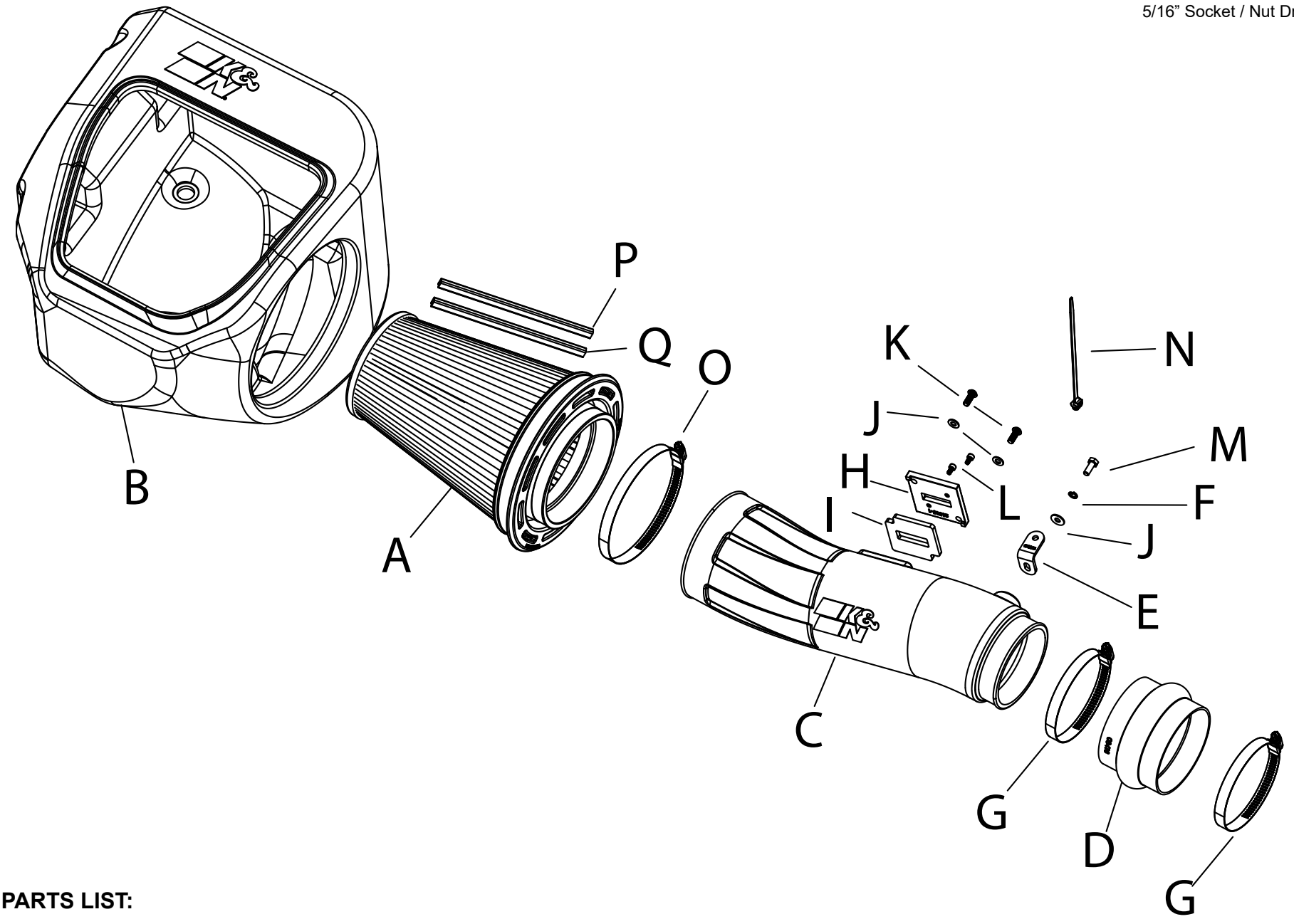

PARTS LIST:

	Description	Qty.	Part #		Description	Qty.	Part #		Description	Qty.	Part #
A	AIR FILTER	1	RU-5302	F	WASHER; M6 SPLIT LOCK	1	1-3025	L	BOLT; M4-.7 X 8MM	2	07733
B	AIRBOX	1	087604	G	HOSE CLAMP; #64 BLACK	2	08645KA	M	BOLT; M6-1 X 16MM, HEX	1	07812
C	TUBE	1	087605	H	ADAPTER; MAF SENSOR	1	088032	N	ZIP TIE; 8” TREE PUSH-MNT	1	1-127
D	HOSE; HUMP 4”ID X 3”L	1	08418	I	GASKET; PORON	1	09069	O	HOSE CLAMP; #88 BLACK	1	08697KA
E	BRACKET; “L”	1	070066A	J	WASHER; 6MM FLAT, SS	3	08269	P	CLIP; SNAP-ON, ORANGE	1	088219
				K	BOLT; M6 X 1.00 X 16MM	2	07730	Q	CLIP; SNAP-ON, RED	1	088218

If you need any assistance please call 1-800-858-3333 to speak with a representative in our Customer Service Center before returning the product.

NOTE: FAILURE TO FOLLOW INSTALLATION INSTRUCTIONS AND NOT USING THE PROVIDED HARDWARE MAY DAMAGE THE INTAKE TUBE, THROTTLE BODY AND ENGINE.

TO START:

1. Turn off the ignition and disconnect the negative battery cable.
NOTE: Disconnecting the negative battery cable erases pre-programmed electronic memories. Write down all memory settings before disconnecting the negative battery cable. Some radios will require an anti-theft code to be entered after the battery is reconnected. The anti-theft code is typically supplied with your owner’s manual. In the event your vehicles anti-theft code cannot be recovered, contact an authorized dealership to obtain your vehicles anti-theft code.



2. Remove the bolt that secures the center of the engine cover then lift the cover up and remove it from the engine.



3. Disconnect the coolant by-pass line from the factory intake tube.

Continued INSTALLATION INSTRUCTIONS



4. Disconnect the mass air sensor electrical connection and then unhook the harness from the intake tube.



5. Loosen the hose clamps that secure intake tube to the air filter housing and intake plenum.



6. Remove the bolt that secures the intake tube to the engine.



7. Disconnect the intake tube from the air-filter housing and then remove it from the vehicle.



8. Lift the air filter housing up and remove it from the vehicle.



9. Remove the four mounting grommets from the factory air filter housing.



10. Install the four-factory air filter housing mounting grommets into the K&N air filter housing and then install the K&N housing into the vehicle so the mounting pins protrude through the grommets.



11. Attach the filter clips to the pleats on the air filter align and push down. Passenger side filters, place orange clip on top and red on bottom.



12. Install the K&N air filter into the air filter housing.



13. Install the provided mass air sensor mounting adapter onto the K&N intake tube using the provided hardware and gasket.
NOTE: Be sure to install the mounting plate in the position in the photo so the sensor is installed in the correct direction.



14. Install the provided mounting bracket onto the K&N intake tube using the provided hardware.



15. Remove the mass air sensor from the factory housing and install it into the adapter installed onto the K&N intake tube.
NOTE: Double check to make sure the sensor is installed in the correct direction, the small opening at the bottom of the sensor should be pointed towards the air filter when correct.



16. Install the provided hump coupler onto the intake plenum with the provided hose clamp. Tighten clamps using 5/16” socket or nut driver.
Note: Do not over tighten clamps.



17. Install the K&N intake tube assembly into the air filter and then into the coupler, the coupler will need to flexed around the tube. Align the tube for best fit and then secure with the hose clamps. Tighten clamps using 5/16” socket or nut driver.
Note: Do not over tighten clamps.



18. Reconnect the mass air sensor electrical connection.



19. Secure the coolant by-pass line to the bracket with the provided mounting cable tie.



20. Reinstall the engine cover and secure with the factory mounting bolt.



21. Reconnect the vehicle's negative battery cable. Double check to make sure everything is tight and properly positioned before starting the vehicle.

22. It will be necessary for all K&N® high flow intake systems to be checked periodically for realignment, clearance and tightening of all connections.
Failure to follow the above instructions or proper maintenance may void warranty.

ROAD TESTING:

1. Start the engine with the transmission in neutral or park, and the parking brake engaged. Listen for air leaks or odd noises. For air leaks secure hoses and connections. For odd noises, find cause and repair before proceeding. This kit will function identically to the factory system except for being louder and much more responsive.

2. Test drive the vehicle. Listen for odd noises or rattles and fix as necessary.

3. If road test is fine, you can now enjoy the added power and performance from your kit.

4. K&N Engineering, Inc., requires cleaning the intake system's air filter element every 100,000 miles. When used in dusty or off-road environments, our filters will require cleaning more often. We recommend that you visually inspect your filter once every 25,000 miles to determine if the screen is still visible. When the screen is no longer visible some place on the filter element, it is time to clean it. To clean and re-oil, purchase our filter Recharger® service kit, part number 99-5050 or 99-5000 and follow the easy instructions.

trailfortress.com/k-n-nextgen-cold-air-intake-ram-1500-l6-3-0l-tt-50-1598