TRAIL FORTRESS

BUILT FOR THE TRAIL. CHECKED FOR YOUR TRUCK.

K&N 50-1578D Installation Instructions

NextGen Dryflow Intake for Ram 1500 V8 (2019-2024)

Part number: 50-1578D

trailfortress.com/k-n-nextgen-dryflow-cold-air-intake-ram-1500-v8-5-7l-f-i-50-1578d

Scan for fitment, price and install help

INSTALLATION INSTRUCTIONS

Not legal for sale or use in California on any pollution controlled motor vehicle.

50-1578D
RAM
2019-2024 1500
V8-5.7L

NOTE: This kit was not designed to fit vehicles with a body lift.

TOOLS NEEDED:
8mm Nut Driver
Small Flathead Screwdriver
13/16” Wrench
5/16” Socket / Nut Driver

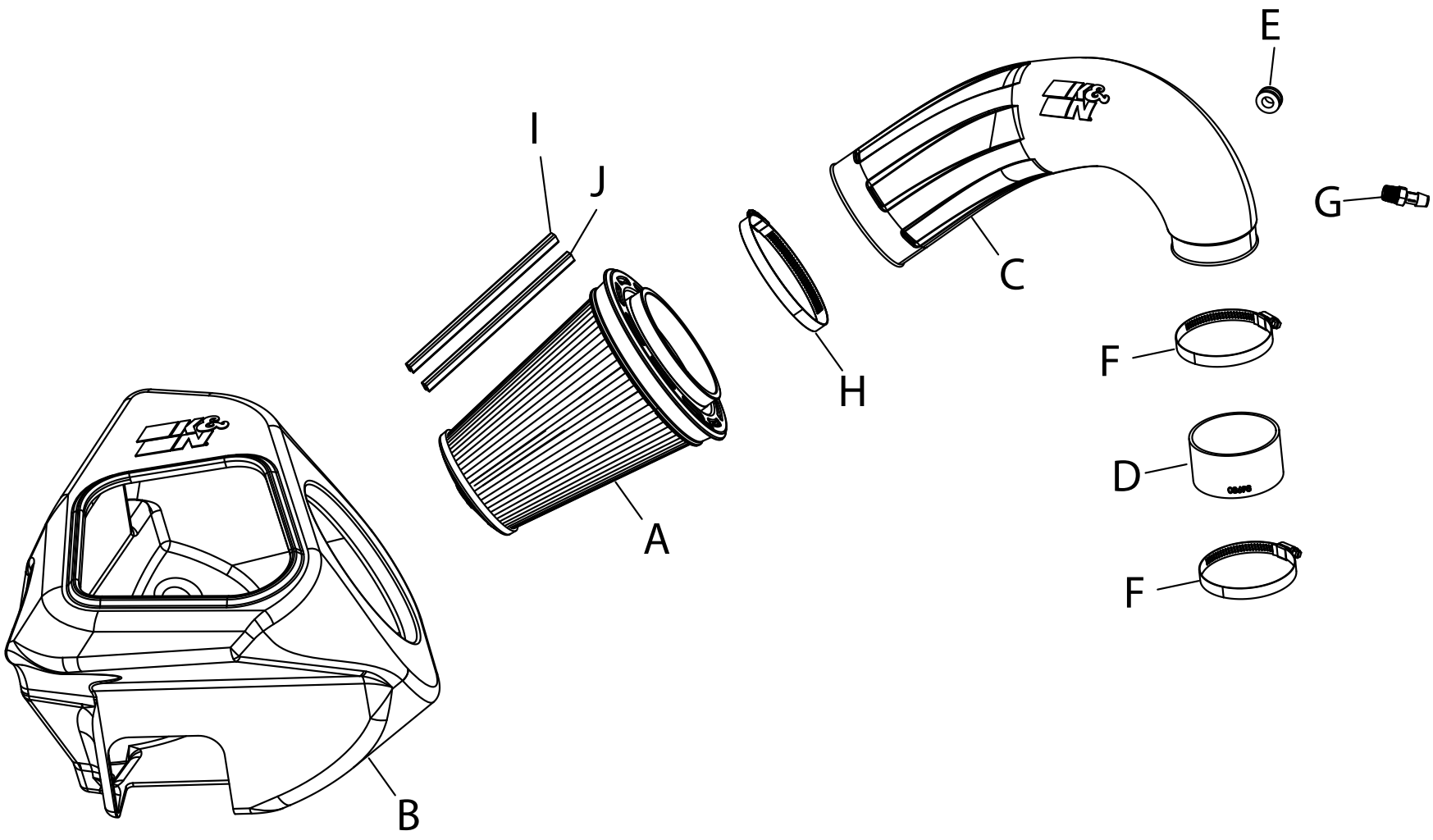

PARTS LIST:

	Description	Qty.	Part #		Description	Qty.	Part #		Description	Qty.	Part #
A	DRY AIR FILTER	1	RU-3151HBK	D	HOSE 3.5”X ID X 2”L	1	08698	G	FITTING; QUICK CONNECT	1	82637-1
B	AIRBOX	1	087614	E	GROMMET	1	KITGRMT03	H	HOSE CLAMP; #88 BLACK	1	KITHS88K
C	TUBE	1	087615	F	HOSE CLAMP; #56 BLACK	2	08620KA	I	CLIP; SNAP-ON ORANGE	1	088219
								J	CLIP; SNAP-ON RED	1	088218

If you need any assistance please call 1-800-858-3333 to speak with a representative in our Customer Service Center before returning the product.

NOTE: FAILURE TO FOLLOW INSTALLATION INSTRUCTIONS AND NOT USING THE PROVIDED HARDWARE MAY DAMAGE THE INTAKE TUBE, THROTTLE BODY AND ENGINE.

TO START:

1. Turn off the ignition and disconnect the negative battery cable.
NOTE: Disconnecting the negative battery cable erases pre-programmed electronic memories. Write down all memory settings before disconnecting the negative battery cable. Some radios will require an anti-theft code to be entered after the battery is reconnected. The anti-theft code is typically supplied with your owner’s manual. In the event your vehicles anti-theft code cannot be recovered, contact an authorized dealership to obtain your vehicles anti-theft code.



2. Disconnect the crank case vent line quick disconnect fitting. Disconnect the inlet air temperature sensor electrical connection.



3. Loosen the hose clamp that secures the factory intake tube to the throttle body and then disconnect the intake tube from the throttle body.



4. Pull up the factory air filter housing to dislodge it from the mounting grommets and then remove the complete intake assembly from the vehicle.



5. Remove the four mounting grommets from the factory air filter housing and install them into the K&N housing as shown.



6. Install the K&N air filter housing into the vehicle so the grommets fit onto the factory mounting posts.



7. Install the provided coupler (08698) onto the throttle body and secure with the provided hose clamp.Tighten clamps using 5/16” socket or nut driver.
Note: Do not over tighten clamps.

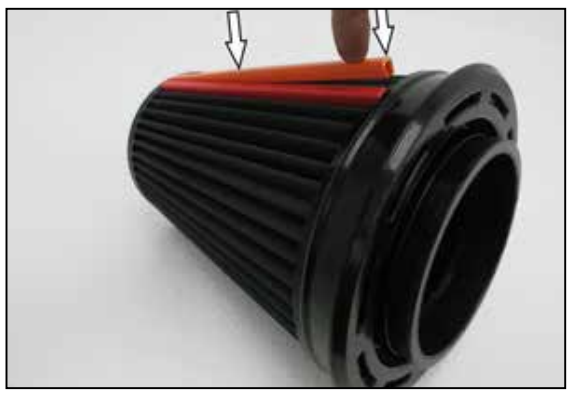

8. Attach the filter clips to the pleats on the air filter align and push down. Passenger side filters, place orange clip on top and red on bottom.



9. Install the K&N air filter into the air filter housing as shown.



10. Install the provided quick disconnect fitting into the K&N intake tube as shown.



11. Remove the inlet air temperature sensor from the factory intake tube and then remove the O-ring from the sensor.



12. Install the sensor into the K&N intake tube using the provided grommet.



13. Install the K&N intake tube into the filter and then into the coupler at the throttle body, adjust the tube for best fit and then secure with the provided hose clamp.Tighten clamps using 5/16” socket or nut driver.
Note: Do not over tighten clamps.



14. Reconnect the inlet air temperature electrical connection and CCV hose.



15. Reconnect the vehicle’s negative battery cable. Double check to make sure everything is tight and properly positioned before starting the vehicle.

16. It will be necessary for all K&N® high flow intake systems to be checked periodically for realignment, clearance and tightening of all connections.
Failure to follow the above instructions or proper maintenance may void warranty.

ROAD TESTING:

1. Start the engine with the transmission in neutral or park, and the parking brake engaged. Listen for air leaks or odd noises. For air leaks secure hoses and connections. For odd noises, find cause and repair before proceeding. This kit will function identically to the factory system except for being louder and much more responsive.

2. Test drive the vehicle. Listen for odd noises or rattles and fix as necessary.

3. If road test is fine, you can now enjoy the added power and performance from your kit.

4. K&N Engineering, Inc., requires cleaning the intake system’s air filter element every 50,000 miles. When used in dusty or off-road environments, our filters will require cleaning more often. We recommend that you visually inspect your filter once every 25,000 miles to determine if the screen is still visible. When the screen is no longer visible some place on the filter element, it is time to clean it. To clean, purchase our Synthetic Filter Cleaner, part number 99-0624 and follow the easy instructions.

trailfortress.com/k-n-nextgen-dryflow-cold-air-intake-ram-1500-v8-5-7l-f-i-50-1578d