TRAIL FORTRESS

BUILT FOR THE TRAIL. CHECKED FOR YOUR TRUCK.

K&N 50-1572 Installation Instructions

NextGen Cold Air Intake for Durango & Grand Cherokee V6

Part number: 50-1572

trailfortress.com/k-n-nextgen-cold-air-intake-jeep-grand-cherokee-l-v6-3-6l-f-i-50-1572

Scan for fitment, price and install help

INSTALLATION INSTRUCTIONS

Not legal for sale or use in California on any pollution controlled motor vehicle.

50-1572
JEEP/DODGE
2016-22 GRAND CHEROKEE
2016-25 DURANGO
V6-3.6L

NOTE: This kit was not designed to fit vehicles with a body lift.

TOOLS NEEDED:

Adjustable Wrench
5/16” Nut Driver
3/4” Wrench
Flat Blade Screw Driver

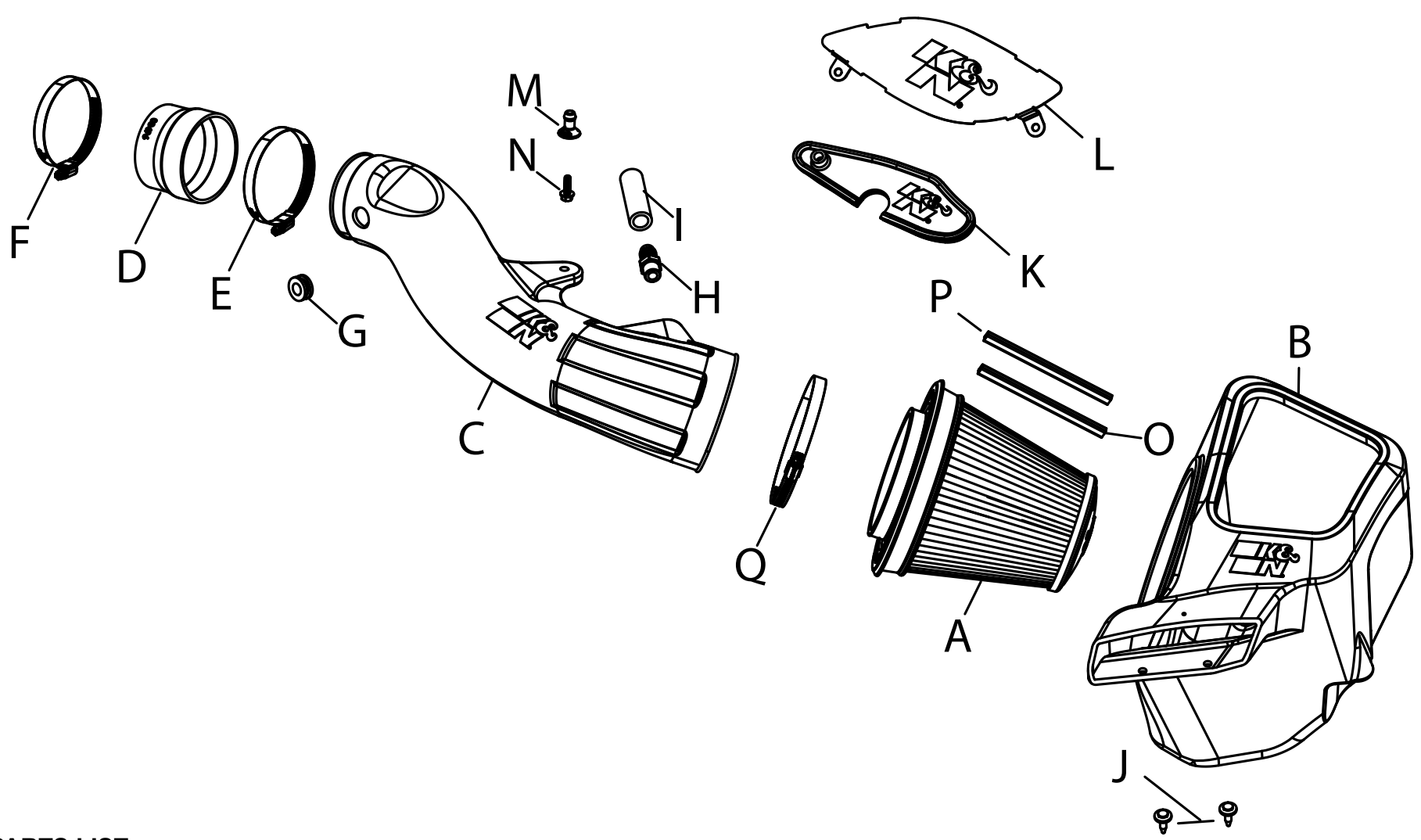

PARTS LIST:

	Description	Qty.	Part #		Description	Qty.	Part #		Description	Qty.	Part #
A	AIR FILTER	1	RU-5303	G	GROMMET; 1/2”ID	1	KITGRMT03	M	MOUNT; PLASTIC NYLON	1	8-186-1
B	AIRBOX	1	087637	H	FITTING; 5/8” BARB	1	82635	N	BOLT; M6-1 X 20	1	1-2038
C	TUBE	1	087630	I	HOSE; 5/8”ID X 3”L	1	08464	O	CLIP; SNAP-ON RED	1	088222
D	HOSE; 3.5”ID TO 3.25”ID	1	08496	J	CLIP; RETAINER	2	KITRETCLIP02	P	CLIP; SNAP-ON ORANGE	1	088223
E	HOSE CLAMP; #56 BLK	1	08620KA	K	BLOCK OFF; HOOD VENT	1	21597	Q	HOSE CLAMP; #88 BLK	1	KITHS88K
F	HOSE CLAMP; #52 BLK	1	08610KA	L	BLOCK OFF; MILD STL	1	073262				

If you need any assistance please call 1-800-858-3333 to speak with a representative in our Customer Service Center before returning the product.

NOTE: FAILURE TO FOLLOW INSTALLATION INSTRUCTIONS AND NOT USING THE PROVIDED HARDWARE MAY DAMAGE THE INTAKE TUBE, THROTTLE BODY AND ENGINE.

TO START:

1. Turn off the ignition and disconnect the negative battery cable.
NOTE: Disconnecting the negative battery cable erases pre-programmed electronic memories. Write down all memory settings before disconnecting the negative battery cable. Some radios will require an anti-theft code to be entered after the battery is reconnected. The anti-theft code is typically supplied with your owner’s manual. In the event your vehicles anti-theft code cannot be recovered, contact an authorized dealership to obtain your vehicles anti-theft code.



2. Lift the inspection cover and remove the bolt that secures the decorative engine cover. Then remove the decorative engine cover from the vehicle.
NOTE: The cover is also secured by four mounting studs and grommets



3. Disconnect the IAT sensor electrical connection.

Continued INSTALLATION INSTRUCTIONS



4. Loosen the hose clamps securing the intake tube to the throttle body and air filter housing and then remove the intake tube assembly from the vehicle.
NOTE: The intake tube assembly is also held on with two mounting studs and grommets.



5. Disconnect the crank case vent tube from the elbow attached to the factory air filter housing as shown.



6. Unhook the hood seal mounting pin from the fresh air intake scoop.



7. Lift the air filter housing to dislodge it from the mounting grommets and then remove it from the vehicle.

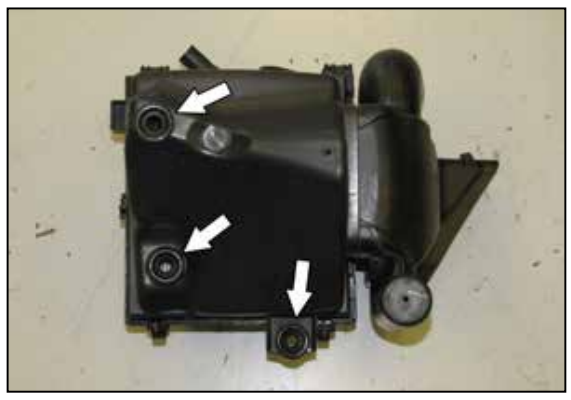

8. Remove the three mounting grommets from the factory air filter housing.



9. Install the three mounting grommets into the K&N air filter housing as shown.

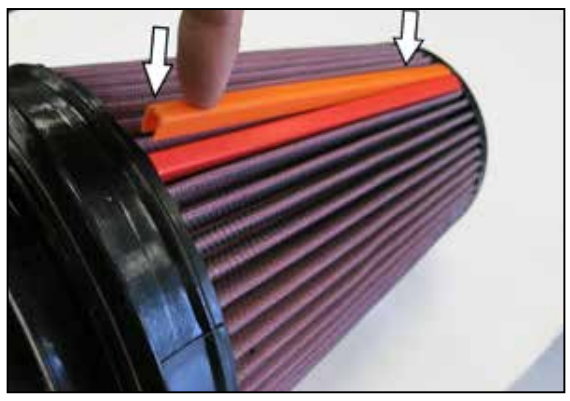

10. Attach the filter clips to the pleats on the air filter align and push down. Driver side filters, place orange clip on top and red on bottom.



11. Install the K&N air filter into the K&N air filter housing as shown.



12. Install the K&N air filter housing assembly into the vehicle so the mounting studs insert into the grommets.



13. Attach the factory hood seal to the fresh air duct of the K&N air filter housing.



14. Install the provided coupler onto the throttle body and secure with the provided hose clamp.



15. Remove the IAT sensor from the factory housing and remove the O-ring from the sensor. Install the sensor into the K&N intake tube using the provided grommet.



16. Install the provided mounting stud onto the K&N intake tube using the provided hardware. Install the CCV vent fitting provided into the K&N intake tube.
NOTE: The CCV fitting uses npt style threads, do not over tighten.



17. Install the K&N intake tube into the air filter and then into the coupler at the throttle body, adjust for best fit and then secure with the provided hose clamps.



18. Install the provided CCV hose onto the factory CCV pipe and then connect it to the CCV fitting installed into the K&N intake tube.





19. During inclement weather, install the provided heat extractor vent block-off if the vehicle is equipped with heat extractor vents. On Dodge vehicles, remove the two bolts that secure the driver side vent. Install and secure the provided block-off and securewith the factory hardware.



20. On Jeep vehicles Install the provided flexible block-off into the hood.



21. Reconnect the vehicle's negative battery cable. Double check to make sure everything is tight and properly positioned before starting the vehicle.

22. It will be necessary for all K&N® high flow intake systems to be checked periodically for realignment, clearance and tightening of all connections. Failure to follow the above instructions or proper maintenance may void warranty.

ROAD TESTING:

1. Start the engine with the transmission in neutral or park, and the parking brake engaged. Listen for air leaks or odd noises. For air leaks secure hoses and connections. For odd noises, find cause and repair before proceeding. This kit will function identically to the factory system except for being louder and much more responsive.

2. Test drive the vehicle. Listen for odd noises or rattles and fix as necessary.

3. If road test is fine, you can now enjoy the added power and performance from your kit.

4. K&N Engineering, Inc., requires cleaning the intake system's air filter element every 100,000 miles. When used in dusty or off-road environments, our filters will require cleaning more often. We recommend that you visually inspect your filter once every 25,000 miles to determine if the screen is still visible. When the screen is no longer visible some place on the filter element, it is time to clean it. To clean and re-oil, purchase our filter Recharger® service kit, part number 99-5050 or 99-5000 and follow the easy instructions.

trailfortress.com/k-n-nextgen-cold-air-intake-jeep-grand-cherokee-l-v6-3-6l-f-i-50-1572