K&N 50-1566 Installation Instructions

NextGen Cold Air Intake for Jeep Wrangler V6

Part number: 50-1566

trailfortress.com/k-n-nextgen-cold-air-intake-jeep-wrangler-v6-3-6l-f-i-50-1566

Scan for fitment, price and install help

INSTALLATION INSTRUCTIONS

Not legal for sale or use in California on any pollution controlled motor vehicle.

50-1566
JEEP
2012-2018 Wrangler JK
V6-3.6L

TOOLS NEEDED:

5/16” Nut driver
Adjustable wrench
Ratchet
Extension
10mm socket
Flat blade screwdriver
Side cutters

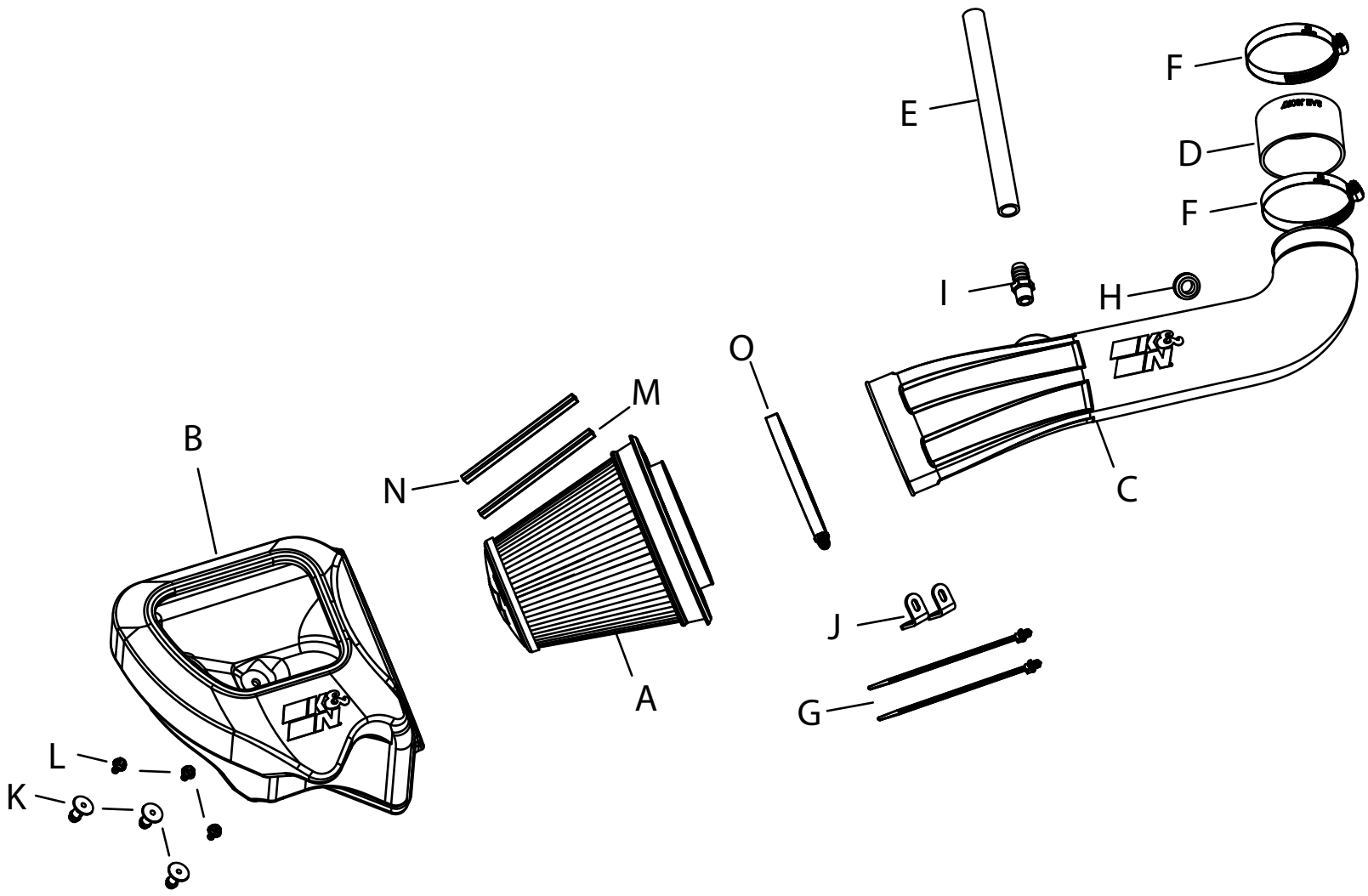

PARTS LIST:

	Description	Qty.	Part #		Description	Qty.	Part #		Description	Qty.	Part #
A	AIR FILTER	1	RU-5303	F	HOSE CLAMP; #52 BLK	2	08610KA	K	MOUNT; PLASTIC AIRBOX	3	8-186-1
B	AIRBOX	1	087635	G	ZIP TIE; 8” TREE PUSH-MNT	2	1-127	L	BOLT; M6-1 X 12, HEX	3	1-2110
C	TUBE	1	087636	H	GROMMET; 9/16”ID	1	KITGRMT02	M	CLIP; SNAP-ON, RED	1	088222
D	HOSE; 3.25”ID X 2”L	1	08690	I	FITTING; 5/8” BARB TO 3/8”NPT	1	82635	N	CLIP; SNAP-ON, ORANGE	1	088223
E	HOSE; 5/8”ID X 10”L	1	5-7010	J	BRACKET; “L”	2	070066A	O	HOSE CLAMP; #88 BLK	1	KITHS88K

If you need any assistance please call 1-800-858-3333 to speak with a representative in our Customer Service Center before returning the product.

NOTE: FAILURE TO FOLLOW INSTALLATION INSTRUCTIONS AND NOT USING THE PROVIDED HARDWARE MAY DAMAGE THE INTAKE TUBE, THROTTLE BODY AND ENGINE.

TO START:

1. Turn off the ignition and disconnect the negative battery cable.
NOTE: Disconnecting the negative battery cable erases pre-programmed electronic memories. Write down all memory settings before disconnecting the negative battery cable. Some radios will require an anti-theft code to be entered after the battery is reconnected. The anti-theft code is typically supplied with your owner’s manual. In the event your vehicles anti-theft code cannot be recovered, contact an authorized dealership to obtain your vehicles anti-theft code.



2. Lift the engine cover and remove it from the vehicle.



3. Loosen the hose clamp that secures the intake tube to the factory air filter housing.



4. Remove the two bolts that secure the factory intake tube to the core support. **NOTE: These bolts will be reused.**



5. Loosen the hose clamp that secures the factory intake tube to the throttle body.



6. Disconnect the factory intake tube from the throttle body and lift it up enough to access the IAT electrical connection. Disconnect the IAT electrical connection and then remove the intake tube from the vehicle.



7. Disconnect the flexible CCV hose from the CCV hard line where shown.



8. Lift the factory air filter housing straight up and remove it from the vehicle.



9. Install the three mounting studs provided onto the K&N air filter housing using the provided hardware.



10. Install the K&N air filter housing assembly into the vehicle so the mounting studs insert into the factory air filter housing mounting grommets.

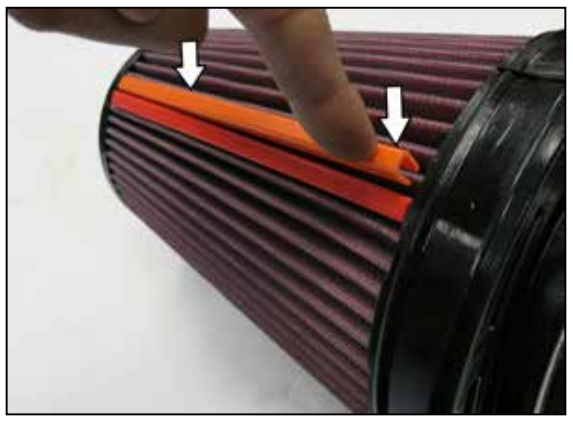

11. Attach the filter clips to the pleats on the air filter align and push down. Passenger side filters, place orange clip on top and red on bottom.



12. Install the K&N air filter into the K&N air filter housing.



13. Install the provided coupler onto the throttle body.Tighten clamps using 5/16” socket or nut driver.
Note: Do not over tighten clamps.



14.Remove the IAT sensor from the factory housing, remove the O-ring from the sensor and then install the sensor into the K&N intake tube using the provided grommet.



15. Install the provided CCV fitting into the K&N intake tube as shown. **NOTE: The fitting uses NPT threads, do not over tighten.**



16. Install the K&N intake tube assembly into the K&N air filter and then into the coupler on the throttle body, adjust the tube for best fit. Tighten clamps using 5/16” socket or nut driver.
Note: Do not over tighten clamps.



17. Install the provided CCV hose onto the factory CCV pipe and to the CCV fitting installed into the K&N intake tube.



18. Connect the IAT sensor electrical connection.



19. Install the two provided mounting tie wraps onto the two L brackets provided.



20. Install the mounting bracket assemblies onto the core support using the factory bolts from step #4. Secure the coolant hose to the brackets with the tie wraps. Do not over tighten the tie wraps and pinch the coolant hose.



21. Install the engine cover.



22. Reconnect the vehicle’s negative battery cable. Double check to make sure everything is tight and properly positioned before starting the vehicle.

23. It will be necessary for all K&N® high flow intake systems to be checked periodically for realignment, clearance and tightening of all connections.
Failure to follow the above instructions or proper maintenance may void warranty.

ROAD TESTING:

1. Start the engine with the transmission in neutral or park, and the parking brake engaged. Listen for air leaks or odd noises. For air leaks secure hoses and connections. For odd noises, find cause and repair before proceeding. This kit will function identically to the factory system except for being louder and much more responsive.

2. Test drive the vehicle. Listen for odd noises or rattles and fix as necessary.

3. If road test is fine, you can now enjoy the added power and performance from your kit.

4. K&N Engineering, Inc., requires cleaning the intake system’s air filter element every 100,000 miles. When used in dusty or off-road environments, our filters will require cleaning more often. We recommend that you visually inspect your filter once every 25,000 miles to determine if the screen is still visible. When the screen is no longer visible some place on the filter element, it is time to clean it. To clean and re-oil, purchase our filter Recharger® service kit, part number 99-5050 or 99-5000 and follow the easy instructions.

trailfortress.com/k-n-nextgen-cold-air-intake-jeep-wrangler-v6-3-6l-f-i-50-1566