K&N 50-1564 Installation Instructions

NextGen Cold Air Intake for Ram 1500 V6 (2013-2018)

Part number: 50-1564

trailfortress.com/k-n-nextgen-cold-air-intake-ram-1500-v6-3-6l-50-1564

Scan for fitment, price and install help

INSTALLATION INSTRUCTIONS

Not legal for sale or use in California on any pollution controlled motor vehicle.

50-1564
RAM
2013-18 1500
2019-24 1500 CLASSIC
V6-3.6L

NOTE: This kit was not designed to fit vehicles with a body lift.

TOOLS NEEDED:

8MM Nut Driver
Flathead screwdriver
9/16” Wrench
5/16” Socket / Nut Driver

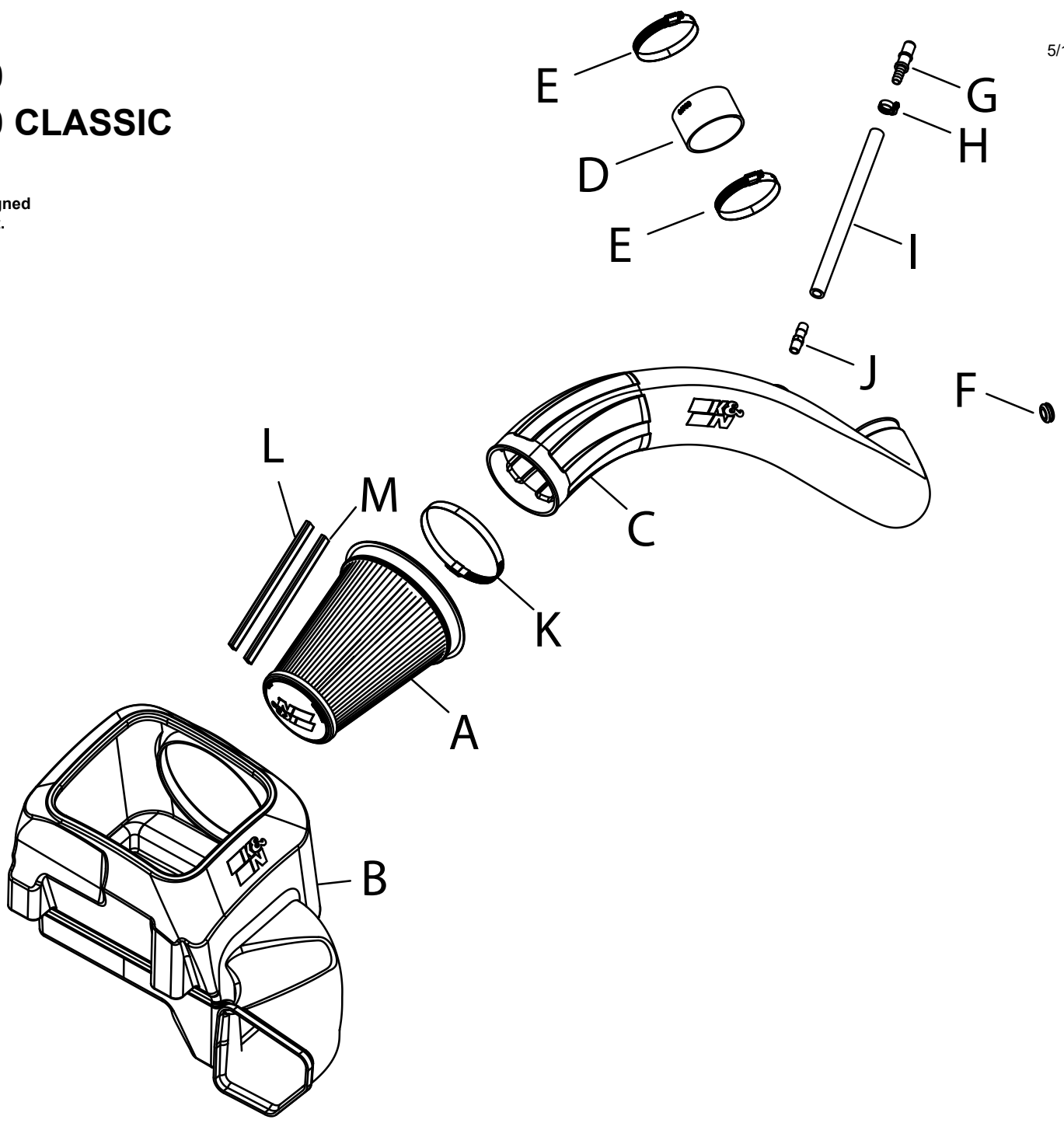

PARTS LIST:

	Description	Qty.	Part #		Description	Qty.	Part #		Description	Qty.	Part #
A	AIR FILTER	1	RU-5302	E	HOSE CLAMP; #52 BLACK	2	08610KA	I	HOSE; 1/2” @12”L	1	087031
B	AIRBOX	1	087612	F	GROMMET	1	KITGRMT02	J	VENT; STRT 1/2” HOSE 1/4”NPT	1	080022
C	TUBE	1	087617	G	VENT; 1/2” TO 5/8” BARB QC	1	82629	K	HOSE CLAMP; #88 BLACK	1	KITHS88K
D	HOSE; 3.25 X 2”L	1	08690	H	HOSE CLAMP; #6 MINI	1	08407	L	CLIP; SNAP-ON, ORANGE	1	088219
								L	CLIP; SNAP-ON, RED	1	088218

If you need any assistance please call 1-800-858-3333 to speak with a representative in our Customer Service Center before returning the product.

NOTE: FAILURE TO FOLLOW INSTALLATION INSTRUCTIONS AND NOT USING THE PROVIDED HARDWARE MAY DAMAGE THE INTAKE TUBE, THROTTLE BODY AND ENGINE.

TO START:

1. Turn off the ignition and disconnect the negative battery cable.
NOTE: Disconnecting the negative battery cable erases pre-programmed electronic memories. Write down all memory settings before disconnecting the negative battery cable. Some radios will require an anti-theft code to be entered after the battery is reconnected. The anti-theft code is typically supplied with your owner’s manual. In the event your vehicles anti-theft code cannot be recovered, contact an authorized dealership to obtain your vehicles anti-theft code.



2. Disconnect the IAT sensor electrical connection and loosen the hose clamp that secures the intake plenum to the throttle body.



3. Loosen the hose clamp that secures the intake hose to the intake plenum and then disconnect the hose.

Continued INSTALLATION INSTRUCTIONS



4. Unhook the intake plenum from the mounting posts, then the throttle body and remove it from the engine.



5. Lift the air filter housing up to dislodge it from the mounting posts and then remove it from the vehicle.



6. Remove the four mounting grommets from the factory air filter housing and install them into the K&N air filter housing.



7. Install the K&N air filter housing into the vehicle so the mounting posts protrude through the mounting grommets.
NOTE: Due to A/C line location inconsistencies, it may be required to remove the bolt that secures the A/C line to the inner fender to install the housing, it may also be necessary to adjust the A/C line for proper fitment.



8. Install the provided coupler onto the throttle body with the hose clamps. Tighten clamps using 5/16” socket or nut driver.
Note: Do not over tighten clamps.



9. Assemble the provided CCV hose, fittings & clamp as shown.



10. Install the CCV hose assembly into the K&N intake tube as shown.
NOTE: The fitting uses NPT threads, hand tighten the fitting and then use a wrench and turn the fitting one revolution.



11. Attach the filter clips to the pleats on the air filter align and push down. Passenger side filters, place orange clip on top and red on bottom.



12. Install the K&N air filter into the K&N air filter housing.



13. Remove the IAT sensor from the factory intake plenum, remove the O-ring from the sensor and then install it into the K&N intake tube with the provided grommet.



14. Install the intake tube into the air filter and then into the coupler on the throttle body, adjust the tube for best fit and secure with the hose clamps. Tighten clamps using 5/16” socket or nut driver.
Note: Do not over tighten clamps.



15. Connect the CCV hose quick connect fitting into the factory CCV fitting.



16. Reconnect the IAT sensor electrical connection.



17. Reconnect the vehicle's negative battery cable. Double check to make sure everything is tight and properly positioned before starting the vehicle.

18. It will be necessary for all K&N® high flow intake systems to be checked periodically for realignment, clearance and tightening of all connections. Failure to follow the above instructions or proper maintenance may void warranty.

ROAD TESTING:

1. Start the engine with the transmission in neutral or park, and the parking brake engaged. Listen for air leaks or odd noises. For air leaks secure hoses and connections. For odd noises, find cause and repair before proceeding. This kit will function identically to the factory system except for being louder and much more responsive.

2. Test drive the vehicle. Listen for odd noises or rattles and fix as necessary.

3. If road test is fine, you can now enjoy the added power and performance from your kit.

4. K&N Engineering, Inc., requires cleaning the intake system's air filter element every 100,000 miles. When used in dusty or off-road environments, our filters will require cleaning more often. We recommend that you visually inspect your filter once every 25,000 miles to determine if the screen is still visible. When the screen is no longer visible some place on the filter element, it is time to clean it. To clean and re-oil, purchase our filter Recharger® service kit, part number 99-5050 or 99-5000 and follow the easy instructions.

trailfortress.com/k-n-nextgen-cold-air-intake-ram-1500-v6-3-6l-50-1564