TRAIL FORTRESS

BUILT FOR THE TRAIL. CHECKED FOR YOUR TRUCK.

K&N 50-1563 Installation Instructions

NextGen Cold Air Intake for Durango & Grand Cherokee

Part number: 50-1563

trailfortress.com/k-n-nextgen-cold-air-intake-jeep-grand-cherokee-v8-5-7l-50-1563

Scan for fitment, price and install help

INSTALLATION INSTRUCTIONS

Not legal for sale or use in California on any pollution controlled motor vehicle.

50-1563
JEEP / DODGE
2011-21 Grand Cherokee
V8-5.7L
2011-25 Durango
V8-5.7L

NOTE: This kit was not designed to fit vehicles with a body lift.

TOOLS NEEDED:

4mm Allen Wrench
Flathead screwdriver
Extension
Ratchet
8mm socket
13/16” wrench
Pliers
10mm Socket
5/16” Socket / Nut Driver

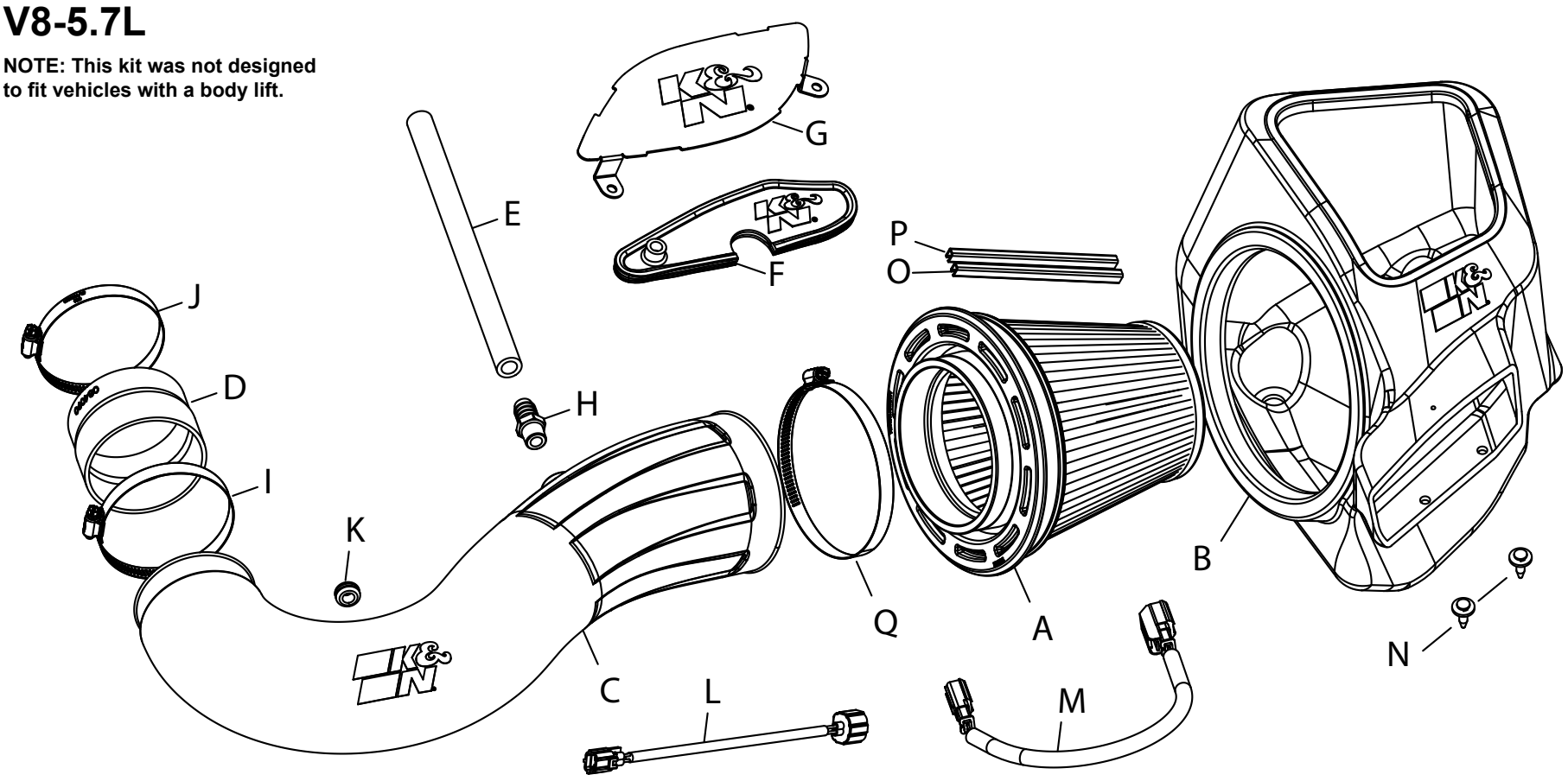

PARTS LIST:

	Description	Qty.	Part #		Description	Qty.	Part #		Description	Qty.	Part #
A	AIR FILTER	1	RU-5303	G	BLOCK OFF; MILD STL	1	073262	M	EXTENSION HARNESS	1	21681
B	AIRBOX	1	087637	H	FITTING; 5/8” BARB TO 3/8”NPT	1	82635	N	CLIP; RETAINER BODY NYLON	2	KITRETCLIP02
C	TUBE	1	087625	I	HOSE CLAMP; #60 BLACK	1	08624KA	O	CLIP; SNAP-ON, RED	1	088222
D	HOSE; 3-5/8” TO 3.5”	1	084090	J	HOSE CLAMP; #56 BLACK	1	08620KA	P	CLIP; SNAP-ON, ORANGE	1	088223
E	HOSE; 1/2” ID X 12”L	1	087031	K	GROMMET	1	KITGRMT03	Q	HOSE CLAMP; #88 BLACK	1	KITHS88K
F	BLOCK OFF; HOOD VENT	1	21597	L	EXTENSION HARNESS	1	21680				

If you need any assistance please call 1-800-858-3333 to speak with a representative in our Customer Service Center before returning the product.

NOTE: FAILURE TO FOLLOW INSTALLATION INSTRUCTIONS AND NOT USING THE PROVIDED HARDWARE MAY DAMAGE THE INTAKE TUBE, THROTTLE BODY AND ENGINE.

TO START:

1. Turn off the ignition and disconnect the negative battery cable.

NOTE: Disconnecting the negative battery cable erases pre-programmed electronic memories. Write down all memory settings before disconnecting the negative battery cable. Some radios will require an anti-theft code to be entered after the battery is reconnected. The anti-theft code is typically supplied with your owner’s manual. In the event your vehicles’ anti-theft code cannot be recovered, contact an authorized dealership to obtain your vehicles anti-theft code.



2. Lift up the engine cover to dislodge it from the mounting grommets and remove it from the vehicle.

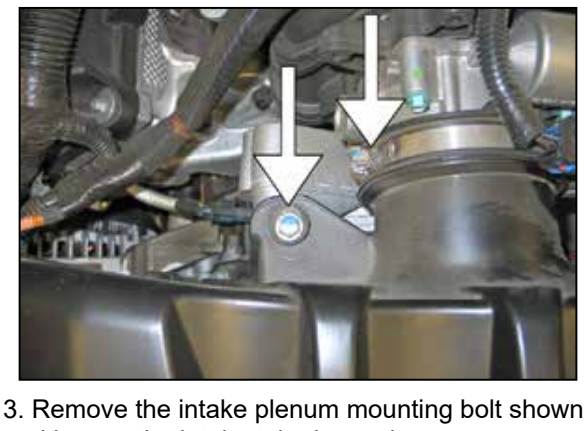

3. Remove the intake plenum mounting bolt shown and loosen the intake tube hose clamp.

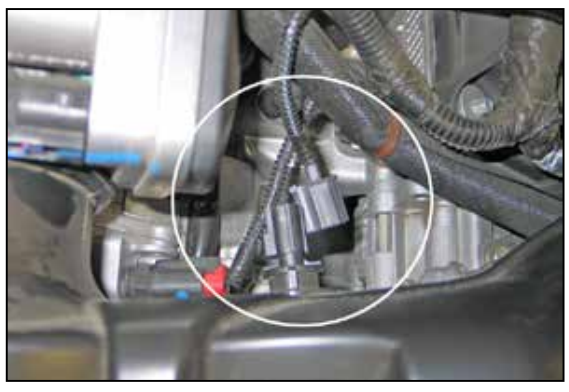

4. Disconnect the inlet air temperature air sensor electrical connection.



5. Disconnect the crankcase vent hose from the port on the valve cover.

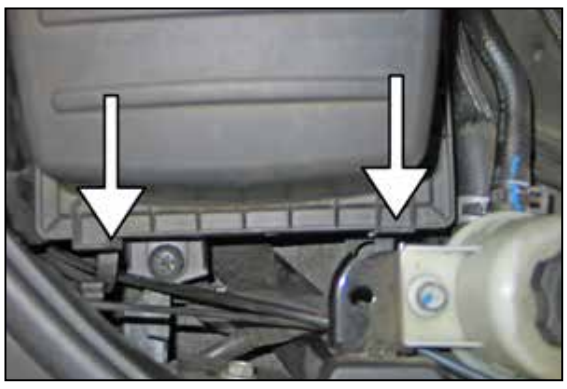

6. Release the two upper airbox retaining clips.



7. Remove the upper airbox and intake tube assembly.



8. Unhook the sealing trim from the fresh air intake scoop and keep clip.



9. Lift up the lower airbox to dislodge it from the mounting grommets and then remove the lower airbox from the vehicle. Some vehicles may have a power steering line attached to the air box than will need to be unhooked.
NOTE: K&N Engineering, Inc., recommends that customers do not discard factory air intake.



10. Remove three factory airbox mounting grommets from the lower airbox.

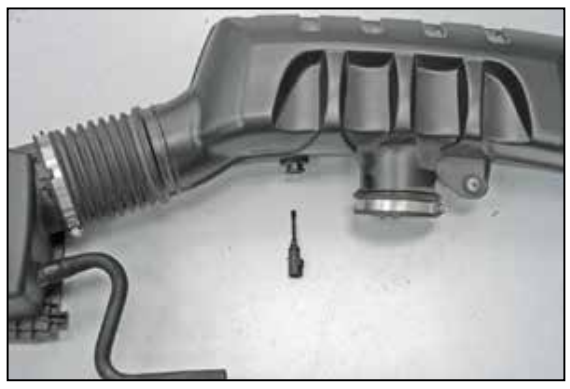

11. Release the locking tab and then remove the inlet air temperature sensor from the factory intake tube by twisting counter clockwise.
NOTE: The inlet air temperature sensor is very fragile; take care to avoid damage while handling the sensor.



12. Install the 3 grommets from step 10 into the new K&N airbox.

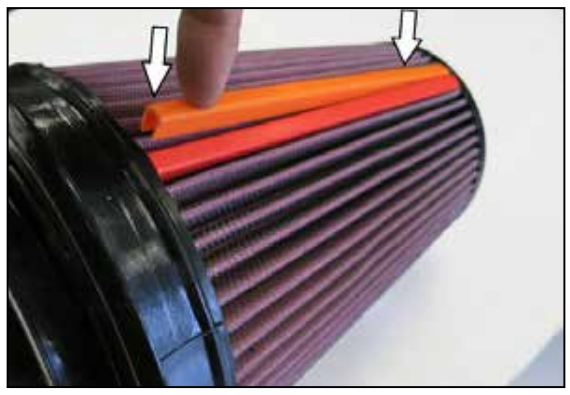

13. ***NOTE: Attach the filter clips to the pleats on the air filter align and push down. Driver side filters, place orange clip on top and red on bottom.***



14. Install the air filter into the K&N airbox.



15. Intall the airbox assembly into the vehicle and position to the original airbox mounting studs.



16. Secure the front of the airbox using provided push clips.



17. Install the hose with clamps to the throttle body and tighten clamp on throttle body only. Tighten clamps using 5/16” socket or nut driver.
Note: Do not over tighten clamps.



18. With provided grommet, attach to the hole on the intake tube. Install the temperature sensor into the grommet.
NOTE: Remove the o-ring for easier installation.



19. Install the provided barb fitting into the K&N intake tube.
NOTE: The quick connect fitting utilizes 3/8npt threads, thread the fitting in by hand and then tighten one revolution.



20. Install the intake tube and position to filter and throttle body. Once adjusted properly, tighten all clamps. Tighten clamps using 5/16” socket or nut driver. **Note: Do not over tighten clamps.**



21. With provided hose, connect the crank case line to the engine and barb fitting on intake tube.
NOTE: Use silcone spray lubricant to assist installing the hose onto the barb fitting installed into the K&N intake tube.



22. Connect the inlet air temperature sensor extension harness into the factory electrical connection and then connect the other end into the inlet air temperature sensor as shown.
NOTE: There are two different types of sensors, be sure to choose the correct harness extension for the sensor used.



23. Re-install the engine cover.



24. Some Dodge Durango models may be equipped with heat extractor vents in the hood. During inclement weather or driving in wet conditions, K&N® recommends installing the provided heat extractor block off plate. Remove the two screws that secure the factory grid in position.
NOTE: Some model may not have the screws holding in the grill.



25. Place the provided block off into position and reinstall the factory screws.
NOTE: On models with out the two screws holding the grill, insert the block-off like a grommet into the opening.
NOTE: This block off does not seal the heat extractor vent completely. It is intended to reduce the amount of moisture that can directly come in contact with the air filter.



26. Reconnect the vehicle’s negative battery cable. Double check to make sure everything is tight and properly positioned before starting the vehicle.

27. It will be necessary for all K&N® high flow intake systems to be checked periodically for realignment, clearance and tightening of all connections.
Failure to follow the above instructions or proper maintenance may void warranty.

ROAD TESTING:

1. Start the engine with the transmission in neutral or park, and the parking brake engaged. Listen for air leaks or odd noises. For air leaks secure hoses and connections. For odd noises, find cause and repair before proceeding. This kit will function identically to the factory system except for being louder and much more responsive.

2. Test drive the vehicle. Listen for odd noises or rattles and fix as necessary.

3. If road test is fine, you can now enjoy the added power and performance from your kit.

4. K&N Engineering, Inc., requires cleaning the intake system’s air filter element every 100,000 miles. When used in dusty or off-road environments, our filters will require cleaning more often. We recommend that you visually inspect your filter once every 25,000 miles to determine if the screen is still visible. When the screen is no longer visible some place on the filter element, it is time to clean it. To clean and re-oil, purchase our filter Recharger® service kit, part number 99-5050 or 99-5000 and follow the easy instructions.

trailfortress.com/k-n-nextgen-cold-air-intake-jeep-grand-cherokee-v8-5-7l-50-1563