TRAIL FORTRESS

BUILT FOR THE TRAIL. CHECKED FOR YOUR TRUCK.

K&N 50-1542 Installation Instructions

NextGen Cold Air Intake for Charger & Challenger V8

Part number: 50-1542

trailfortress.com/k-n-nextgen-cold-air-intake-dodge-charger-v8-5-7l-f-i-50-1542

Scan for fitment, price and install help

INSTALLATION INSTRUCTIONS

Not legal for sale or use in California on any pollution controlled motor vehicle.

50-1542
DODGE / CHRYSLER
2011-2023 Challenger
2011-2023 Charger
2011-2023 300C
V8-5.7L HEMI

NOTE: This kit was not designed to fit vehicles with Shaker hood.

TOOLS NEEDED:

5/16” nut driver
Ratchet
Extension
8mm socket
14mm socket
3/4” Wrench

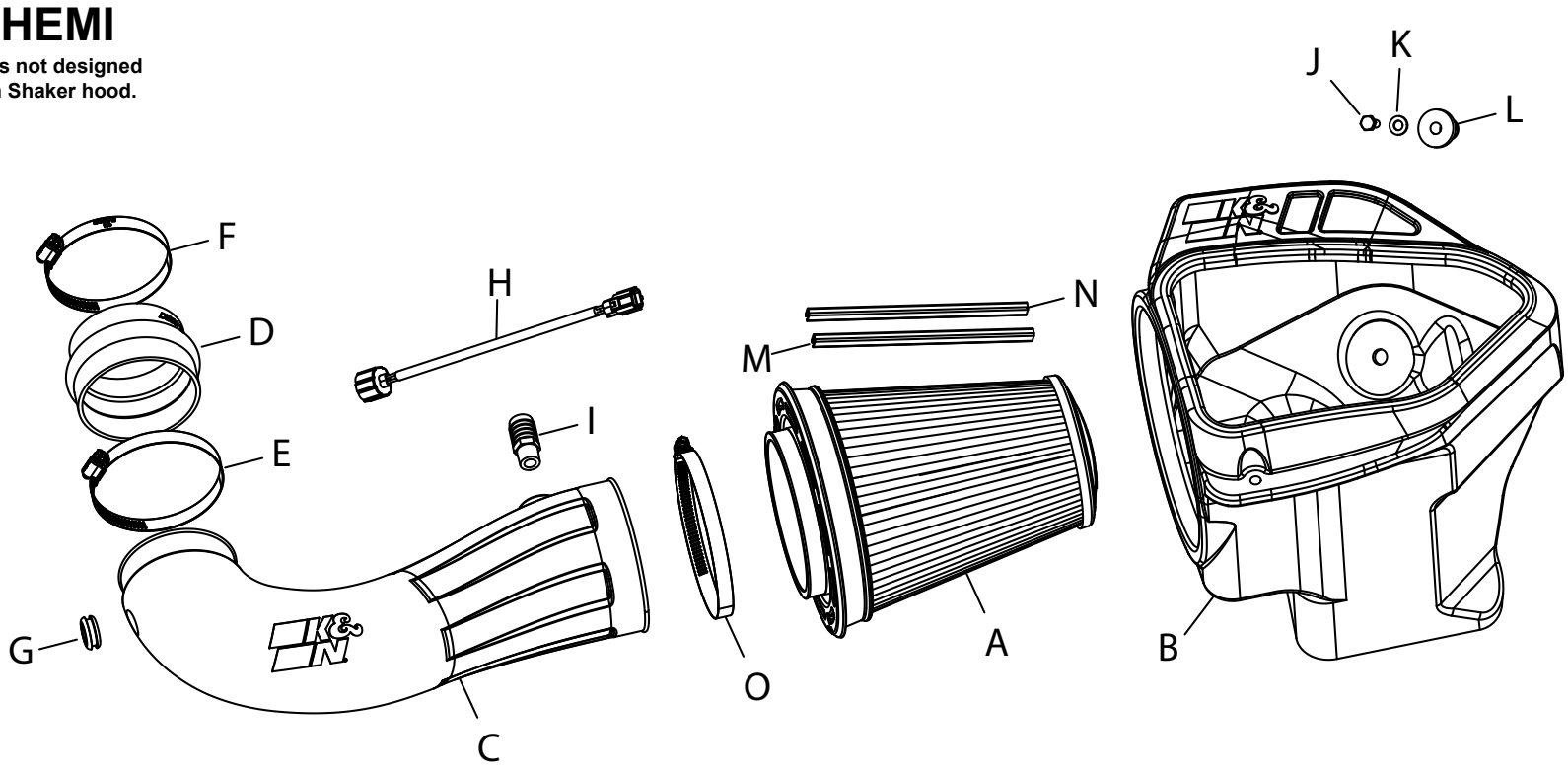

PARTS LIST:

	Description	Qty.	Part #		Description	Qty.	Part #		Description	Qty.	Part #
A	AIR FILTER	1	RU-5301	F	HOSE CLAMP; #56 BLK	1	08620KA	K	WASHER; 8MM, FLAT	1	08272
B	AIRBOX	1	087620	G	GROMMET; 9/16”ID	1	KITGRMT02	L	INSERT; 3/8-16 X 3/4 RUBBER	1	08163
C	TUBE	1	087621	H	EXTENSION HARNESS	1	21680	M	CLIP; SNAP-ON, RED	1	088220
D	HOSE; HUMP 3.5”ID	1	08639	I	FITTING; 3/8”NPT, 3/4” BARB	1	080026	N	CLIP; SNAP-ON, ORANGE	1	088221
E	HOSE CLAMP; #60 BLK	1	08624KA	J	BOLT; 3/8”-16 X 1-1/4”L	1	07779	O	HOSE CLAMP; #88 BLK	1	KITHS88K

If you need any assistance please call 1-800-858-3333 to speak with a representative in our Customer Service Center before returning the product.

NOTE: FAILURE TO FOLLOW INSTALLATION INSTRUCTIONS AND NOT USING THE PROVIDED HARDWARE MAY DAMAGE THE INTAKE TUBE, THROTTLE BODY AND ENGINE.

TO START:

1. Turn off the ignition and disconnect the negative battery cable.
NOTE: Disconnecting the negative battery cable erases pre-programmed electronic memories. Write down all memory settings before disconnecting the negative battery cable. Some radios will require an anti-theft code to be entered after the battery is reconnected. The anti-theft code is typically supplied with your owner’s manual. In the event your vehicles anti-theft code cannot be recovered, contact an authorized dealership to obtain your vehicles anti-theft code.



2. Lift the engine cover up and remove it from the vehicle.



3. Disconnect the IAT sensor electrical connection.



4. Loosen the hose clamp that secures the factory intake tube to the throttle body and separate the tube from the throttle body.



5. 2011-2019 models, pull back CCV hose from air box. 2020 and up models Disconnect the CCV hose from the engine port.



9. Install the K&N air filter housing into the vehicle and secure with the factory mounting bolt from step #6 and the insert nut.



13. Remove the IAT sensor from the factory intake system and remove the O-Ring from the sensor.



6. Remove the bolt that secures the factory air filter housing to the core support.

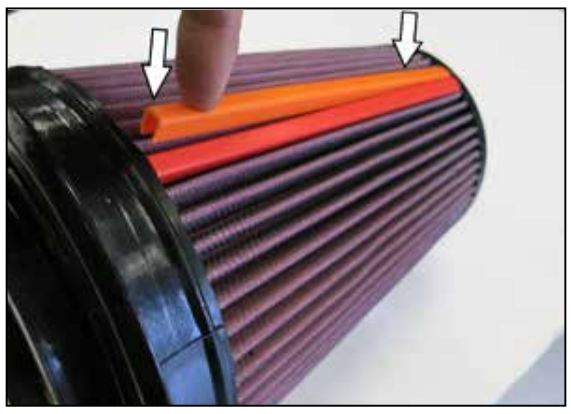

10. Attach the filter clips to the pleats on the air filter align and push down. Driver side filters, place orange clip on top and red on bottom.



14. Install the IAT sensor into the K&N intake tube with the provided grommet.



7. 2020 and up models, disconnect the CCV hose from the quick connect fitting attached to the intake system. Remove the Plastic quick connect from the CCV hose, this will not be used. Save CCV hose for later install. Remove the complete factory intake system from the vehicle.



11. Install the K&N air filter into the K&N air filter housing.



15. Install the provided fitting into the K&N intake tube.



8. Install the provided insert nut onto the K&N air filter housing using the provided hardware.



12.Install the provided hump coupler onto the throttle body and secure with the provided hose clamp. Tighten clamps using 5/16” socket or nut driver. **Note: Do not over tighten clamps.**



16. Install the K&N intake tube into the air filter and then into the coupler at the throttle body, adjust the tube for best fit and then secure with the provided hose clamps. Tighten clamps using 5/16” socket or nut driver. **Note: Do not over tighten clamps.**



17. On all models, the factory CCV hose will connect to the fitting on intake tube. **Note: 2020 and up models, the factory CCV hose will stretch on to the fitting.**



18. Using the provided extension harness, reconnect the IAT electrical connection.



19. Reinstall the factory engine cover.



20. Reconnect the vehicle's negative battery cable. Double check to make sure everything is tight and properly positioned before starting the vehicle.

21. It will be necessary for all K&N® high flow intake systems to be checked periodically for realignment, clearance and tightening of all connections. Failure to follow the above instructions or proper maintenance may void warranty.

ROAD TESTING:

1. Start the engine with the transmission in neutral or park, and the parking brake engaged. Listen for air leaks or odd noises. For air leaks secure hoses and connections. For odd noises, find cause and repair before proceeding. This kit will function identically to the factory system except for being louder and much more responsive.

2. Test drive the vehicle. Listen for odd noises or rattles and fix as necessary.

3. If road test is fine, you can now enjoy the added power and performance from your kit.

4. K&N Engineering, Inc., requires cleaning the intake system's air filter element every 100,000 miles. When used in dusty or off-road environments, our filters will require cleaning more often. We recommend that you visually inspect your filter once every 25,000 miles to determine if the screen is still visible. When the screen is no longer visible some place on the filter element, it is time to clean it. To clean and re-oil, purchase our filter Recharger® service kit, part number 99-5050 or 99-5000 and follow the easy instructions.

trailfortress.com/k-n-nextgen-cold-air-intake-dodge-charger-v8-5-7l-f-i-50-1542