TRAIL FORTRESS

BUILT FOR THE TRAIL. CHECKED FOR YOUR TRUCK.

K&N 33-2023 Installation Instructions

33-2023

Part number: 33-2023

trailfortress.com/k-n-replacement-air-filter-33-2023

Scan for fitment, price and install help

INSTALLATION INSTRUCTIONS

Part Number 33-2023

This filter fits: **See current K&N catalog for complete listing**

FREE K&N DECAL To register your warranty, please see us online at knfilters.com/register. FREE K&N DECAL

Congratulations, you have purchased the finest air filter that money can buy. With proper care, this filter will last 1 million miles or more. This filter may be used in a stock machine, and no modifications will be required. However there are special installation instructions, so please follow the procedures outlined below to ensure that the K&N Air Filter seals properly.

IF YOU NEED ANY ASSISTANCE PLEASE CALL 1-800-858-3333 TO SPEAK WITH A REPRESENTATIVE IN OUR CUSTOMER SERVICE CENTER BEFORE RETURNING THE PRODUCT.

INSTALLATION

1) Remove the stock air filter.
2) Remove any hoses and/or wires that will limit the movement of the air box lid.
3) Install the K&N® Air Filter into the air box base.
4) Angle the lid enough to slide the first tab on the air box lid into the corresponding slot on the air box base. When the tab is inserted, pivot the air box lid so the second and third tabs slide into their slots.
   NOTE: If the rubber seal of the air filter is dry it can be difficult to close the air box lid. Apply a small amount of K&N® Oil or sealing grease to allow the air box lid to close easier.
5) Secure the air box lid with the stock hardware.
   CAUTION! If the lid does not fully close with hand pressure, the air filter is not properly seated into the lid. Do not force the lid closed as this can damage the air box.
6) Reinstall any hoses and/or wires removed in step 2.

THESE INSTRUCTIONS MUST BE FOLLOWED EVERY TIME THE FILTER IS SERVICED, OTHERWISE THE FILTER MAY NOT SEAL, AND DAMAGE TO THE ENGINE COULD RESULT.

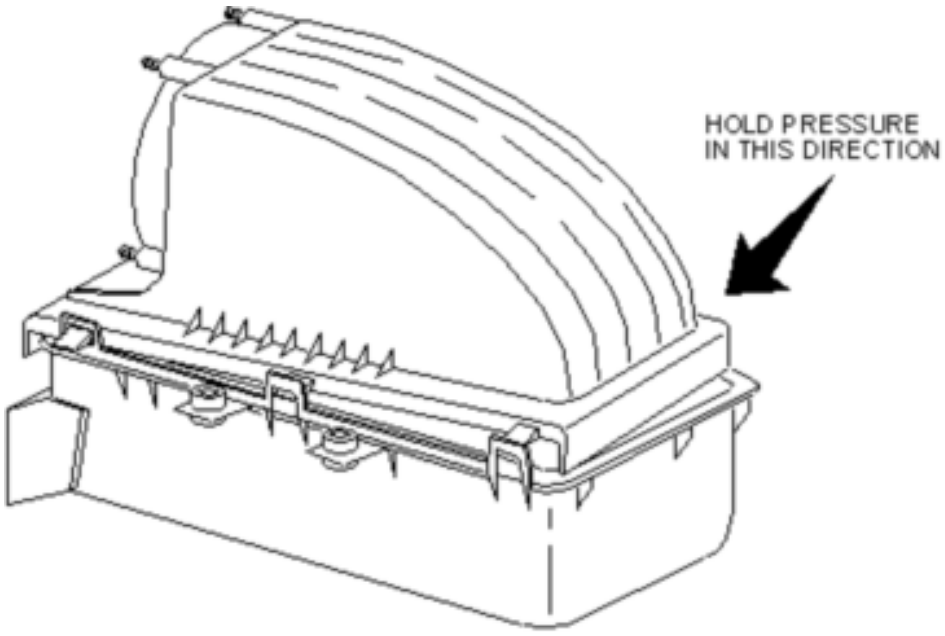

• 1455 CITRUS ST., P.O. BOX 1329, RIVERSIDE, CA., U.S.A. 92502 • TECH SERVICE 800-858-3333 • FAX 951-826-4001
• e-mail: tech@knfilters.com • WWW: http://www.knfilters.com

17741B
8/15/16

trailfortress.com/k-n-replacement-air-filter-33-2023