TRAIL FORTRESS

BUILT FOR THE TRAIL. CHECKED FOR YOUR TRUCK.

K&N 30-9039 Installation Instructions

Cold Air Intake for Toyota Tacoma (2016-2023)

Part number: 30-9039

trailfortress.com/k-n-performance-air-intake-system-30-9039

Scan for fitment, price and install help

DRY FLOW®

AIR INTAKE SYSTEMS

NOT LEGAL FOR SALE OR USE ON ANY POLLUTION CONTROLLED MOTOR VEHICLE IN CALIFORNIA OR STATES ADOPTING CALIFORNIA EMISSION PROCEDURES.

See knfilters.com for CARB status on each part for a specific vehicle

INSTALLATION INSTRUCTIONS

30-9039
TOYOTA
2016-23 Tacoma
V6-3.5L

NOTE: This kit was not designed to fit vehicles with a body lift.

TOOLS NEEDED:

Ratchet
Extension
10mm Socket
12mm Socket
13mm Socket
Flat Blade Screw Driver
Phillips Screw Driver
3mm Allen Key
4mm Allen Key

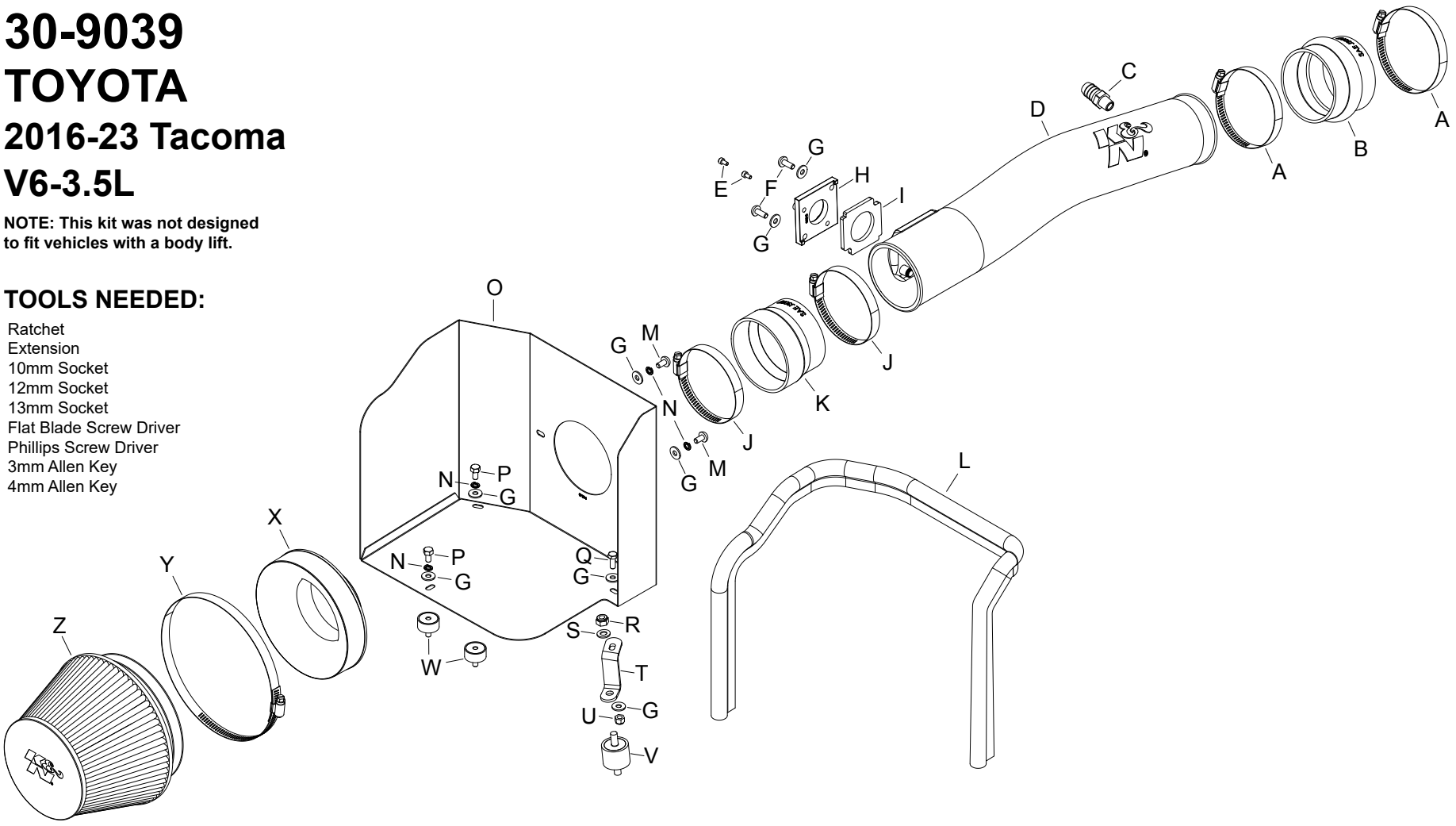

PARTS LIST:

	Description	Qty.	Part #		Description	Qty.	Part #		Description	Qty.	Part #
A	HOSE CLAMP; #52	2	08610	J	HOSE CLAMP; #56	2	08620	S	WASHER; 8MM, FLAT	1	08272
B	HOSE; HUMP 3.25”ID X 2-5/8”L	1	08171	K	HOSE; 3.5”ID X 2”L	1	08698	T	BRACKET; “Z” SHORT	1	07958
C	VENT; 1/4”NPT, 5/8”BARB	1	82638	L	EDGE TRIM; (39”L)	1	102496	U	NUT; 6MM NYLOCK, HEXHD	1	07512
D	INTAKE TUBE; (KO)	1	087311A	M	BOLT; M6-1 X 12MM BTNHD	2	07794	V	MOUNT; RUBBER 1” X 8MM	1	1228560
E	BOLT; M4-.7 X 88MM, ALNHD	2	07733	N	WASHER; M6, SPLIT LOCK	4	1-3025	W	STUD; RUBBER, 1/2”L X 1”W	2	070228
F	BOLT; M6 X 1 X 16MM, BTNHD	2	07730	O	HEAT SHIELD	1	07394A	X	ADAPTER; UNIV 6”	1	21512-1
G	WASHER; 6MM FLAT	8	08269	P	BOLT; M6 X 1 X 12MM, HEXHD	2	07727	Y	HOSE CLAMP; #104 BLK	1	08697KA
H	ADAPTER; MASS AIR SENSOR	1	088048	Q	BOLT; M6-1 X 16MM, HEX	1	07812	Z	AIR FILTER	1	RU-3106HBK
I	GASKET; 3/16” PORON	1	09074	R	NUT; 8MM NYLOCK	1	07502				

If you need any assistance please call 1-800-858-3333 to speak with a representative in our Customer Service Center before returning the product.

NOTE: FAILURE TO FOLLOW INSTALLATION INSTRUCTIONS AND NOT USING THE PROVIDED HARDWARE MAY DAMAGE THE INTAKE TUBE, THROTTLE BODY AND ENGINE.

TO START:

1. Turn off the ignition and disconnect the negative battery cable.
NOTE: Disconnecting the negative battery cable erases pre-programmed electronic memories. Write down all memory settings before disconnecting the negative battery cable. Some radios will require an anti-theft code to be entered after the battery is reconnected. The anti-theft code is typically supplied with your owner’s manual. In the event your vehicles anti-theft code cannot be recovered, contact an authorized dealership to obtain your vehicles anti-theft code.



2. Lift up the engine cover to dislodge it from the mounting studs and then remove it from the vehicle.



3. Release the spring clamp and disconnect the crank case vent hose from the factory intake tube.



4. Loosen the hose clamp securing the factory intake tube to the throttle body.



5. Disconnect the mass air sensor electrical connection and unhook the harness from the air filter housing.



6. Release the two clips securing the upper air filter housing and then remove the intake tube and air filter hosing along with the factory air filter.



7. Remove the three bolts securing the lower air filter housing to the inner fender and then remove the lower air filter housing from the vehicle.

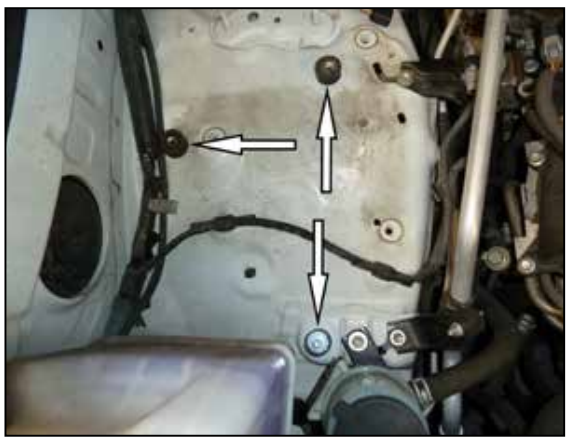

8. Install the three provided rubber mounted studs onto the inner fender in the positions shown.

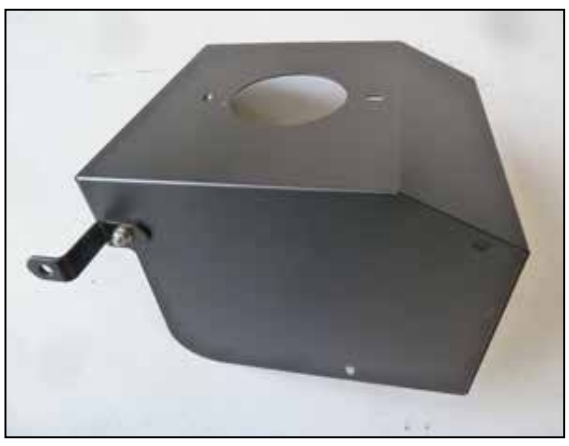

9. Install the provided heat shield bracket (07958) onto the K&N heat shield as shown.



10. Install the provided radius adapter onto the heat shield and secure with the provided hardware.



11. Install the provided edge trim onto the K&N heat shield as shown. **NOTE: Some trimming of the edge trim will be necessary.**



12. Install the heat shield onto the rubber mounted studs installed in the earlier step and secure with the provided hardware.



13. Install the provided coupler (01871) onto the throttle body and secure with the provided hose clamp.



14. Install the provided coupler (08698) onto the filter adapter and secure with the provided hose clamp.



15. Install the provided gasket onto the K&N mass air sensor adapter.



16. Remove the mass air sensor from the factory air filter housing.



17. Install the mass air sensor into the adapter and secure with the provided hardware.



18. Install the mass air sensor assembly into the K&N intake tube and secure with the provided hardware. **NOTE: be sure to install the sensor in the correct direction, the arrow will point towards the direction of air flow.**



19. Install the provided vent fitting into the K&N intake tube as shown.



20. Install the intake tube into the coupling hose at the throttle body and then into the coupling at the filter adapter. Adjust the tube for best fit and then secure with the provided hose clamps.



21. Connect the crank case vent fitting onto the vent fitting installed into the K&N intake tube.



22. Reconnect the mass air sensor electrical connection.



23. Install the K&N air filter.



24. Reinstall the factory engine cover.



25. Reconnect the vehicle's negative battery cable. Double check to make sure everything is tight and properly positioned before starting the vehicle.

26. It will be necessary for all K&N® high flow intake systems to be checked periodically for realignment, clearance and tightening of all connections.
Failure to follow the above instructions or proper maintenance may void warranty.

ROAD TESTING:

1. Start the engine with the transmission in neutral or park, and the parking brake engaged. Listen for air leaks or odd noises. For air leaks secure hoses and connections. For odd noises, find cause and repair before proceeding. This kit will function identically to the factory system except for being louder and much more responsive.

2. Test drive the vehicle. Listen for odd noises or rattles and fix as necessary.

3. If road test is fine, you can now enjoy the added power and performance from your kit.

4. K&N Engineering, Inc., requires cleaning the intake system's air filter element every 50,000 miles. When used in dusty or off-road environments, our filters will require cleaning more often. We recommend that you visually inspect your filter once every 25,000 miles to determine if the screen is still visible. When the screen is no longer visible some place on the filter element, it is time to clean it. To clean, purchase our Synthetic Filter Cleaner, part number 99-0624 and follow the easy instructions.

NOT LEGAL FOR SALE OR USE ON ANY POLLUTION CONTROLLED MOTOR VEHICLE IN CALIFORNIA OR STATES ADOPTING CALIFORNIA EMISSION PROCEDURES.

See knfilters.com for CARB status on each part for a specific vehicle

• 1455 CITRUS ST., P.O. BOX 1329, RIVERSIDE, CA., U.S.A. 92502 • TECH SERVICE 800-858-3333 • FAX 951-826-4001
• e-mail: tech@knfilters.com® • WWW: http://www.knfilters.com®

#19733
03/30/23

trailfortress.com/k-n-performance-air-intake-system-30-9039