TRAIL FORTRESS

BUILT FOR THE TRAIL. CHECKED FOR YOUR TRUCK.

K&N 30-3110 Installation Instructions

Cold Air Intake for GM Full-Size Trucks & SUVs (2021-2026)

Part number: 30-3110

trailfortress.com/k-n-performance-air-intake-system-30-3110

Scan for fitment, price and install help

DRYFLOW AIR INTAKE SYSTEMS

INSTALLATION INSTRUCTIONS

Not legal for sale or use in California on any pollution controlled motor vehicle.

30-3110
CHEVROLET / GMC / CADILLAC
2019-25 Silverado / Sierra
2021-25 Tahoe / Yukon
2021-25 Suburban / Escalade
V8-5.3L / 6.2L

TOOLS NEEDED:

Ratchet
Extension
10mm Deep Socket
3mm Allen Key
4mm Allen Key
t10 Torx
t20 Torx
Phillips Screw Driver
Flat Blade Screw Driver
Pick.

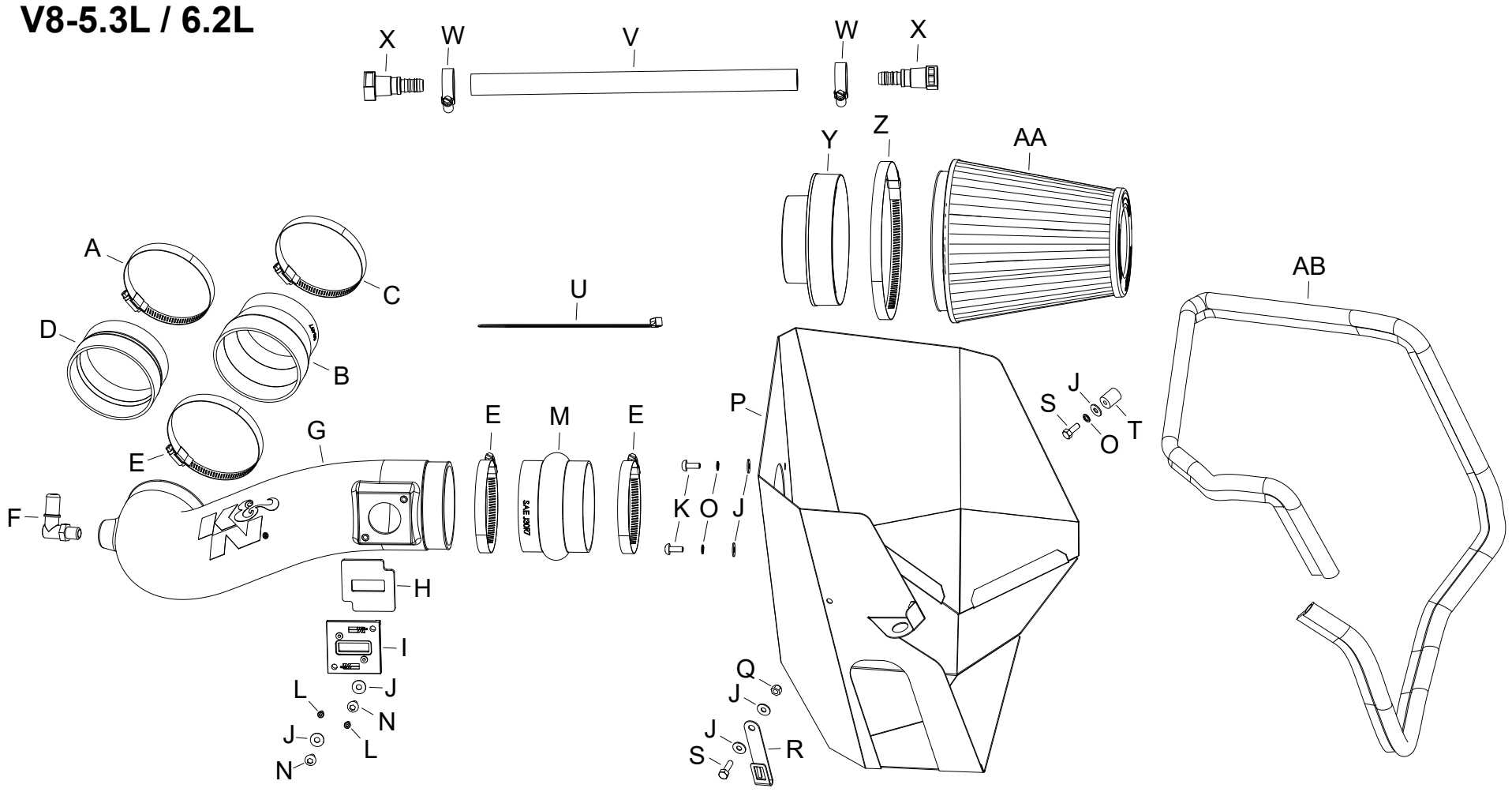

PARTS LIST:

	Description	Qty.	Part #		Description	Qty.	Part #		Description	Qty.	Part #
A	HOSE CLAMP; #60	1	08624	K	BOLT; M6-1 X 12MM BTNHD	2	07794	U	CABLE TIES; 11” BLK	1	21590
B	HOSE; 4”ID TO 3.5”ID X 3”L	1	08497	L	BOLT; M4-.7 X 8MM, ALNHD CAP	2	07733	V	HOSE; 5/8”ID X 15”L	1	AEM-5-7015
C	HOSE CLAMP; #56	1	08620	M	HOSE; HUMP 4”ID X 3”L	1	08418	W	HOSE CLAMP; #10 MINI	2	08411
D	HOSE; 4”ID X 3-13/16”ID X 3”L	1	084107	N	BOLT; M6 X 1 X 16MM BTNHD	2	07730	X	FITTING; QUICK DIS. 16-14MM PCV	2	08526
E	HOSE CLAMP; #64 STAINLESS	3	08645	O	WASHER; M6, SPLIT LOCK, ZINC	3	1-3025	Y	ADAPTER; #454	1	27300
F	VENT; 90”D, 1/4”NPT, TO .600”	1	82633	P	HEAT SHIELD	1	073283	Z	HOSE CLAMP; #104 BLK ZINC	1	08697KA
G	INTAKE TUBE; (MC)	1	087418A	Q	NUT; 6MM NYLOCK, HEXHD	1	07512	AA	AIR FILTER	1	RU-3101HBK
H	GASKET; 3/16” PORON	1	09069	R	BRACKET	1	064358A	AB	EDGE TRIM; (61”L)	1	102492
I	ADAPTOR; MAF SENSOR	1	21515-1	S	BOLT; M6 X 1 X 12MM, HEXHD	2	07727				
J	WASHER; 6MM FLAT	7	08269	T	THREADED BOSS; 5/8”OD X 3/4”L	1	081004				

If you need any assistance please call 1-800-858-3333 to speak with a representative in our Customer Service Center before returning the product.

NOTE: FAILURE TO FOLLOW INSTALLATION INSTRUCTIONS AND NOT USING THE PROVIDED HARDWARE MAY DAMAGE THE INTAKE TUBE, THROTTLE BODY AND ENGINE.

TO START:

1. Turn off the ignition and disconnect the negative battery cable.
NOTE: Disconnecting the negative battery cable erases pre-programmed electronic memories. Write down all memory settings before disconnecting the negative battery cable. Some radios will require an anti-theft code to be entered after the battery is reconnected. The anti-theft code is typically supplied with your owner’s manual. In the event your vehicles anti-theft code cannot be recovered, contact an authorized dealership to obtain your vehicles anti-theft code.



2. Disconnect the mass air sensor electrical connection.



3. Depress the locking tabs and then disconnect the crank case vent line from the intake plenum and valve cover vent port.