TRAIL FORTRESS

BUILT FOR THE TRAIL. CHECKED FOR YOUR TRUCK.

# K&N 30-3092 Installation Instructions

Cold Air Intake for Chevrolet Camaro SS (2016-2024)

Part number: 30-3092

trailfortress.com/k-n-performance-air-intake-system-30-3092

Scan for fitment, price and install help

AIR INTAKE SYSTEMS

NOT LEGAL FOR SALE OR USE ON ANY POLLUTION CONTROLLED MOTOR VEHICLE IN CALIFORNIA OR STATES ADOPTING CALIFORNIA EMISSION PROCEDURES.

See knfilters.com for CARB status on each part for a specific vehicle

# INSTALLATION INSTRUCTIONS

# 30-3092
# CHEVROLET
## 2016-23 Camaro SS
## V8-6.2L

**TOOLS NEEDED:**

Ratchet
Extension
T50 TORX
T20 TORX
10mm Socket
3mm Allen Key
4mm Allen Key
10mm Wrench
Flat Blade Screw Driver
Pliers

**NOTE: This kit was not designed to fit vehicles with a body lift.**

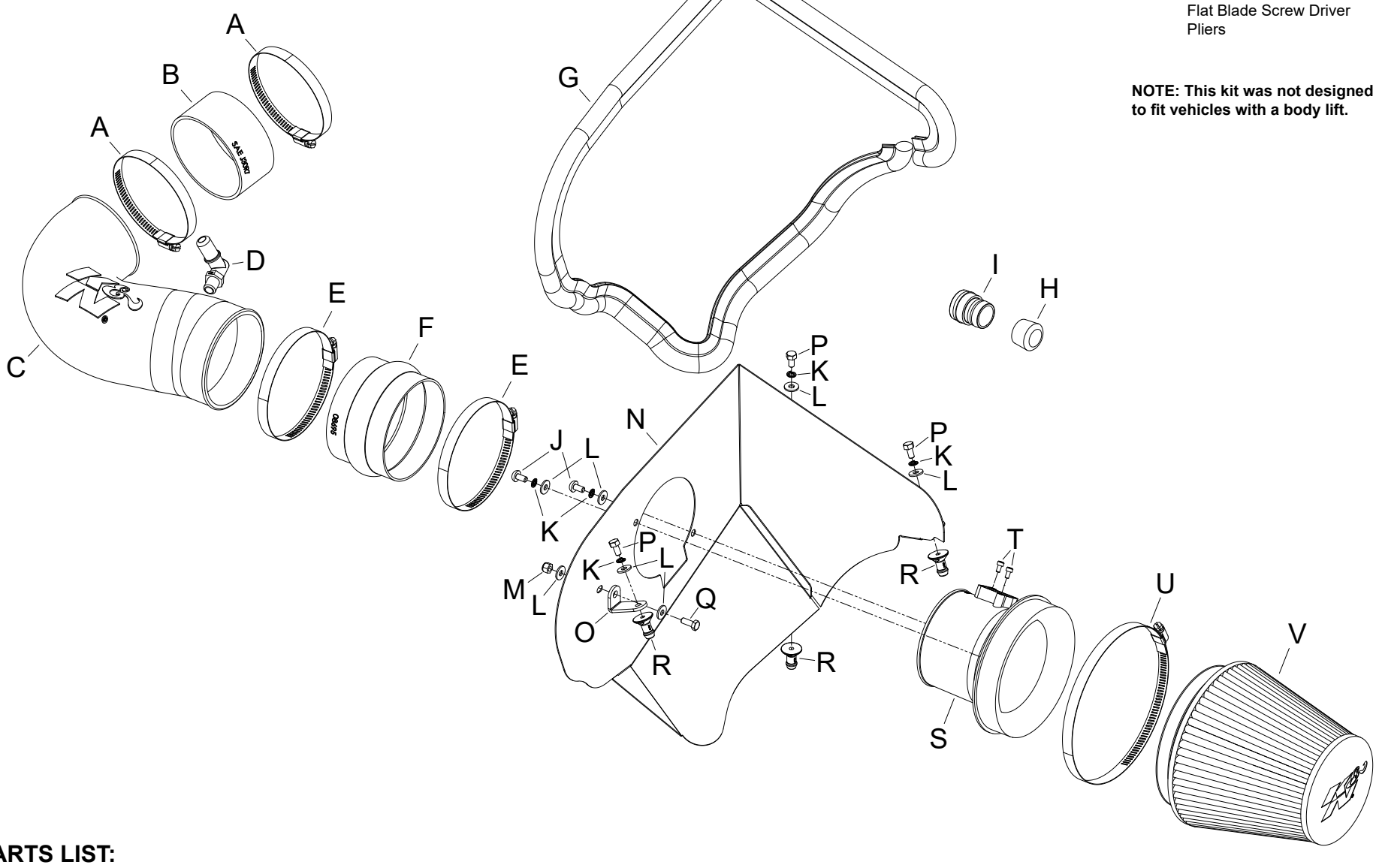


**PARTS LIST:**

| | Description | Qty. | Part # | | Description | Qty. | Part # | | Description | Qty. | Part # |
|---|---|---|---|---|---|---|---|---|---|---|---|
| A | HOSE CLAMP; #64 STAINLESS | 2 | 08645 | H | CAPLUG; 15/16”ID, 3/4”L, BLK | 1 | 08246 | O | BRACKET; “L” | 1 | 064340 |
| B | HOSE; 4”ID X 2”L | 1 | 08761 | I | FITTING; 1-1/8”OD Q.C, BLK | 1 | 088012 | P | BOLT; M6 X 1 X 12MM, HEXHD | 3 | 07727 |
| C | INTAKE TUBE; (KX) | 1 | 087320A | J | BOLT; M6-1 X 12MM BTNHD | 2 | 07794 | Q | BOLT; M6-1 X 16MM, HEX | 1 | 07812 |
| D | VENT; 90”D, 1/4”NPT, TO .600” | 1 | 82633 | K | WASHER; M6, SPLIT LOCK | 5 | 1-3025 | R | MOUNT; PLASTIC AIRBOX | 3 | 8-186-1 |
| E | HOSE CLAMP; #72 | 2 | 08671 | L | WASHER; 6MM FLAT | 7 | 08269 | S | ADAPTER; MAF SENSOR | 1 | 088035 |
| F | HOSE; HUMP 4.5”ID X 3”L | 1 | 08695 | M | NUT; 6MM NYLOCK HEXHD | 1 | 07512 | T | BOLT; M4-.7 X 8MM, ALNHD | 2 | 07733 |
| G | EDGE TRIM; (61”L) | 1 | 102492 | N | HEAT SHIELD | 1 | 073227A | U | HOSE CLAMP; #104 BLK | 1 | 08697KA |
| | | | | | | | | V | AIR FILTER | 1 | RU-3101HBK |

**If you need any assistance please call 1-800-858-3333 to speak with a representative in our Customer Service Center before returning the product.**

**NOTE: FAILURE TO FOLLOW INSTALLATION INSTRUCTIONS AND NOT USING THE PROVIDED HARDWARE MAY DAMAGE THE INTAKE TUBE, THROTTLE BODY AND ENGINE.**

### TO START:

1. Turn off the ignition and disconnect the negative battery cable.
**NOTE: Disconnecting the negative battery cable erases pre-programmed electronic memories. Write down all memory settings before disconnecting the negative battery cable. Some radios will require an anti-theft code to be entered after the battery is reconnected. The anti-theft code is typically supplied with your owner’s manual. In the event your vehicles anti-theft code cannot be recovered, contact an authorized dealership to obtain your vehicles anti-theft code.**



2. Disconnect the mass air sensor electrical connection.



3. Disconnect the crank case vent quick connect fitting from the intake tube.



4. Release the spring clamp securing the sound tube to the fitting in the intake tube and then disconnect the sound tube.



5. Loosen the hose clamps securing the intake tube to the throttle body and air filter housing and then remove the intake tube.



6. Remove the two bolts securing the sound drum to the front of the engine.




7. Open the clamp securing the sound tube to the air filter housing.



8. Disconnect the mount securing the sound tube to the A/C line.



9. Disconnect the sound tube quick disconnect fitting and remove the complete sound tube system.



10. Install the provided cap onto the quick disconnect union.



11. Install the cap assembly into the remaining sound tube.



12. Lift up the air filter housing to dislodge it from the mounting grommets and then remove it from the vehicle.

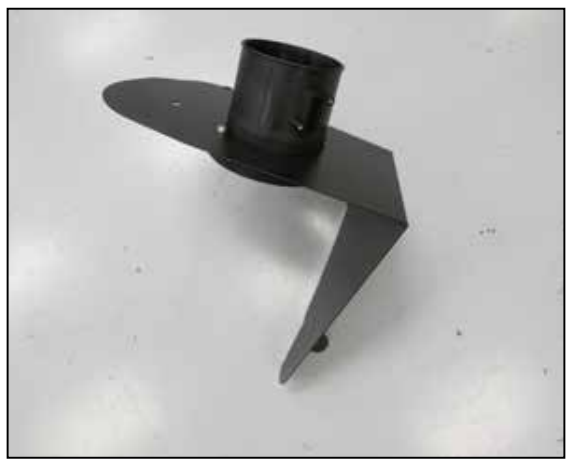

13. Install the K&N mass air sensor into the heat shield and secure with the provided hardware.



14. Install the mounting stud onto the mounting bracket using the provided hardware.

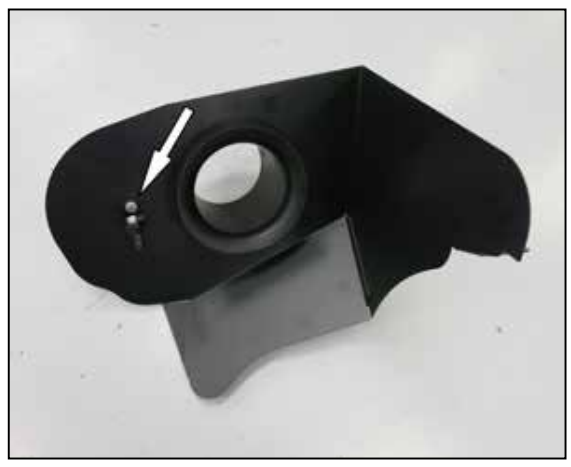

15. Install the mounting bracket assembly onto the heat shield using the provided hardware.

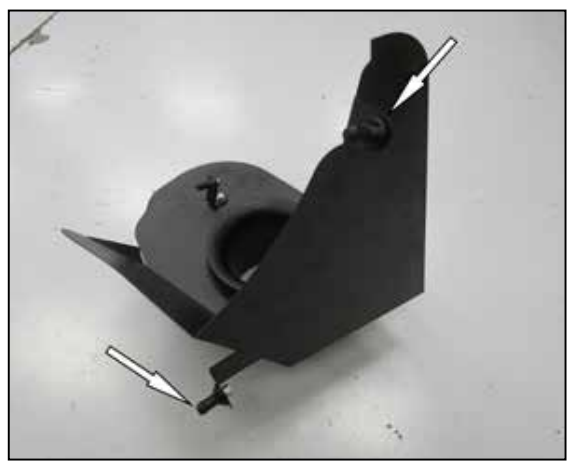

16. Install the remaining two mounting studs onto the heat shield using the provided hardware.



17. Install the provided edge trim onto the heat shield as shown. **NOTE: Some trimming of the edge trim will be necessary.**



18. Remove the mass air sensor from the factory air filter housing.



19. Install the mass air sensor into the K&N mass air housing and secure with the provided hardware.



20. Install the K&N heat shield assembly onto the air filter housing mounting grommets.



21. Install the provided coupler hose (08761) onto the throttle body and secure with the provided hose clamp.



22. Install the provided step hump coupler (08695) onto the filter adapter and secure with the provided hose clamp. **NOTE: The larger side of the coupler will be stretched onto the mass air sensor housing.**



23. Install the K&N air filter onto the filter adapter and secure with the provided hose clamp.



24. Install the provided 90* fitting into the K&N intake tube as shown.



25. Install the K&N intake tube into the hump coupler and then into the coupler at the throttle body, adjust the tube for best fit and then secure with the provided hose clamps.



26. Connect the crank case vent hose to the quick disconnect fitting installed into the K&N intake tube. Connect the mass air sensor electrical connection.



27. Reconnect the vehicle's negative battery cable. Double check to make sure everything is tight and properly positioned before starting the vehicle.

28. It will be necessary for all K&N® high flow intake systems to be checked periodically for realignment, clearance and tightening of all connections. Failure to follow the above instructions or proper maintenance may void warranty.

## ROAD TESTING:

1. Start the engine with the transmission in neutral or park, and the parking brake engaged. Listen for air leaks or odd noises. For air leaks secure hoses and connections. For odd noises, find cause and repair before proceeding. This kit will function identically to the factory system except for being louder and much more responsive.

2. Test drive the vehicle. Listen for odd noises or rattles and fix as necessary.

3. If road test is fine, you can now enjoy the added power and performance from your kit.

4. K&N Engineering, Inc., requires cleaning the intake system's air filter element every 50,000 miles. When used in dusty or off-road environments, our filters will require cleaning more often. We recommend that you visually inspect your filter once every 25,000 miles to determine if the screen is still visible. When the screen is no longer visible some place on the filter element, it is time to clean it. To clean, purchase our Synthetic Filter Cleaner, part number 99-0624 and follow the easy instructions.

**NOT LEGAL FOR SALE OR USE ON ANY POLLUTION CONTROLLED MOTOR VEHICLE IN CALIFORNIA OR STATES ADOPTING CALIFORNIA EMISSION PROCEDURES.**

**See knfilters.com for CARB status on each part for a specific vehicle**



trailfortress.com/k-n-performance-air-intake-system-30-3092