TRAIL FORTRESS

BUILT FOR THE TRAIL. CHECKED FOR YOUR TRUCK.

K&N 30-3082 Installation Instructions

Cold Air Intake for GM Full-Size Trucks & SUVs (2015-2020)

Part number: 30-3082

trailfortress.com/k-n-performance-air-intake-system-30-3082

Scan for fitment, price and install help

DRY FLOW®
AIR INTAKE SYSTEMS

NOT LEGAL FOR SALE OR USE ON ANY POLLUTION CONTROLLED MOTOR VEHICLE IN CALIFORNIA OR STATES ADOPTING CALIFORNIA EMISSION PROCEDURES.
See knfilters.com for CARB status on each part for a specific vehicle

INSTALLATION INSTRUCTIONS

30-3082
CHEVROLET / GMC / CADILLAC
2014-19 Silverado 1500 / Sierra 1500
2015-20 Tahoe / Suburban / Yukon / Escalade ESV
V8-5.3L / 6.2L

NOTE: This kit was not designed to fit vehicles with a body lift.

TOOLS NEEDED:

Ratchet
Extension
10mm Socket
Flat Blade Screw Driver
T10 TORX
4mm Allen Key
3mm Allen Key
¾" Wrench

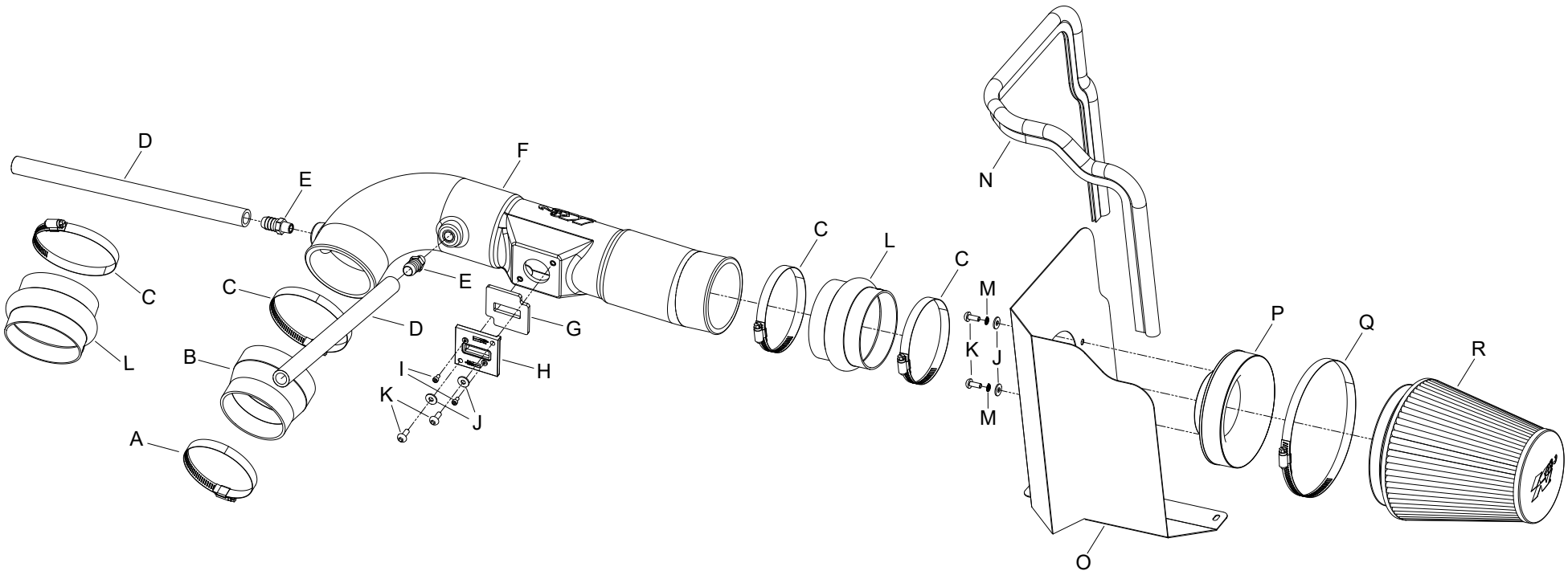

PARTS LIST:

	Description	Qty.	Part #		Description	Qty.	Part #		Description	Qty.	Part #
A	HOSE CLAMP; #56	1	08620	G	GASKET; 3/16" PORON	1	09069	M	WASHER; M6, SPLIT LOCK	2	1-3025
B	HOSE; 4"ID TO 3.5"ID X 3"L	1	08497	H	ADAPTOR; MAF SENSOR	1	21515-1	N	EDGE TRIM; (44"L)	1	102486
C	HOSE CLAMP; #64 STAINLESS	4	08645	I	BOLT; M4-.7 X 8MM, ALNHD	2	07733	O	HEAT SHIELD	1	073155-1A
D	HOSE; 5/8"ID X 14"L	2	084083	J	WASHER; 6MM FLAT	4	08269	P	ADAPTOR; #454	1	27300
E	FITTING; VENT, 1/4"NPT	2	08911-2	K	BOLT; M6 X 1 X 16MM, BTNHD	4	07730	Q	HOSE CLAMP; #104 BLK	1	08697KA
F	INTAKE TUBE; (IZ)	1	087268A	L	HOSE; HUMP 4"ID X 3"L	2	08418	R	AIR FILTER	1	RU-3101HBK

If you need any assistance please call 1-800-858-3333 to speak with a representative in our Customer Service Center before returning the product.

NOTE: FAILURE TO FOLLOW INSTALLATION INSTRUCTIONS AND NOT USING THE PROVIDED HARDWARE MAY DAMAGE THE INTAKE TUBE, THROTTLE BODY AND ENGINE.

TO START:

1. Turn off the ignition and disconnect the negative battery cable.
NOTE: Disconnecting the negative battery cable erases pre-programmed electronic memories. Write down all memory settings before disconnecting the negative battery cable. Some radios will require an anti-theft code to be entered after the battery is reconnected. The anti-theft code is typically supplied with your owner's manual. In the event your vehicles anti-theft code cannot be recovered, contact an authorized dealership to obtain your vehicles anti-theft code.



2. Disconnect the mass air sensor electrical connection.



3. Disconnect the two crank case vent tubes from the intake plenum.



4. Loosen the two hose clamps securing the intake plenum to the factory air box and to the throttle body.

Continued INSTALLATION INSTRUCTIONS



5. Remove the intake plenum from the vehicle.



6. Pull up the air box to release it from the mounting grommets and then remove the factory air box from the vehicle. **NOTE: It will be necessary to unhook the mass air sensor wiring harness from the air box as it is removed.**

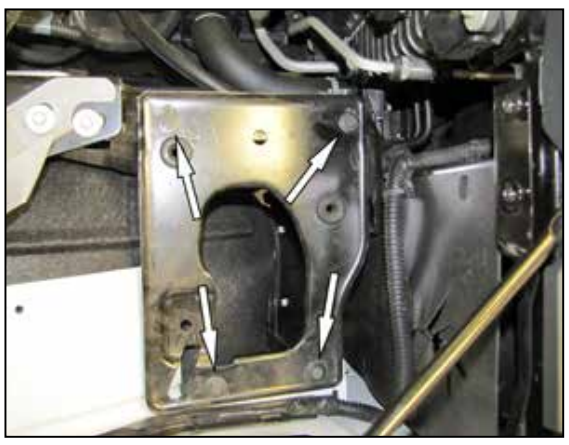

7. Remove the four bolts securing the air box mounting tray and then remove the tray from the vehicle. **NOTE: Three of the bolts will be reused in a latter step.**

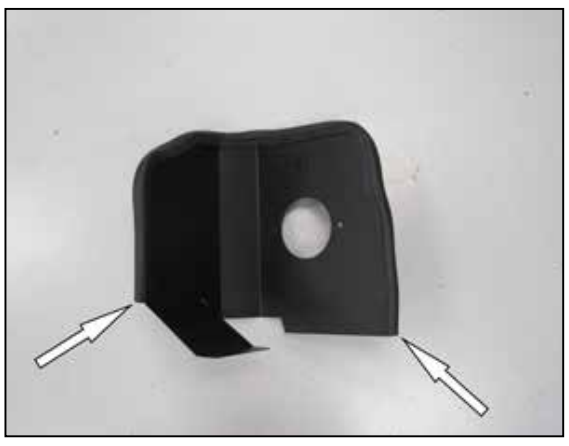

8. Install the provided edge trim onto the heat shield as shown. **NOTE: Some trimming of the edge trim will be necessary.**



9. Install the heat shield assembly and secure the air box mounting plate location using the three factory bolts from step #7.



10. Install the filter adapter into the K&N air filter and secure with the provided hose clamp.



11. Install the filter assembly into the heat shield filter top first, then rotate the filter and pass the adapter through the hole in the heat shield. Secure the filter adapter to the heat shield using the provided hardware.



12. Remove the two factory crank case vent tubes from the vehicle.



13. Install the coupling hose (08497) to the throttle body and secure with the provided hose clamp.



14. Install the coupling hose (08418) to the filter adapter and secure with the provided hose clamp.

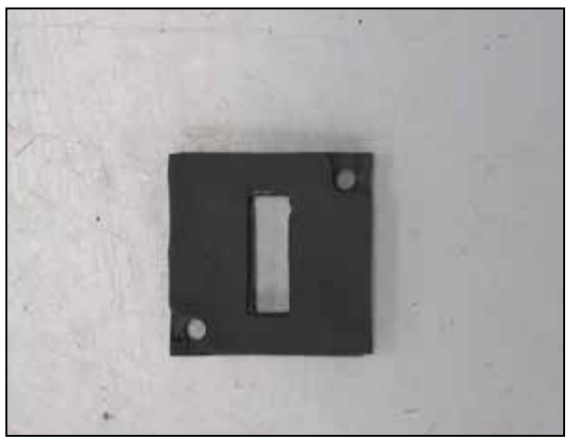

15. Install the provided gasket onto the K&N mass air sensor adapter as shown.



16. Remove the mass air sensor from the factory air box.



17. Install the mass air sensor into the K&N adapter and secure with the provided hardware.

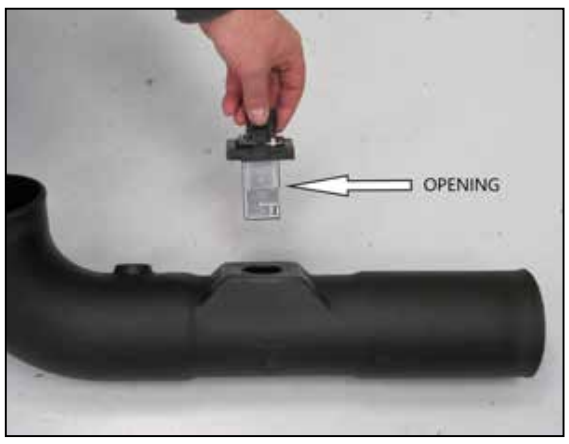

18. Install the mass air sensor assembly into the K&N intake tube and secure with the provided hardware. **NOTE: Be sure to install the mass air sensor into the tube in the correct direction, the opening should face the filter end of the intake tube.**

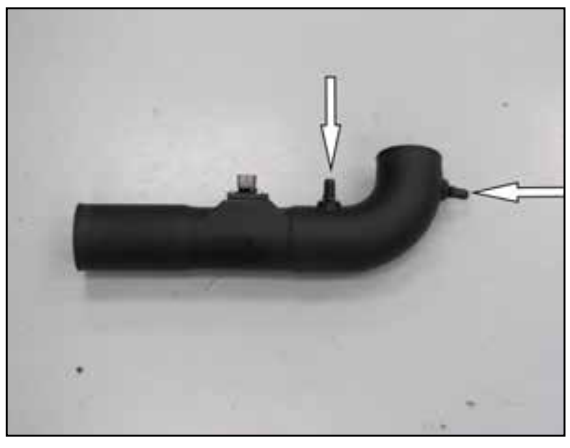

19. Install the two provided crank case vent fittings into the K&N intake tube as shown.



20. Install the K&N intake tube into the hose at the filter adapter and then into the hose at the throttle body, adjust the tube for best fit and then secure with the provided hose clamps.



21. Connect the provided crank case vent hoses to the ports on the valve covers and then connect the open ends to the fittings installed into the K&N intake tube.



22. Reconnect the mass air sensor electrical connection.



23. Reconnect the vehicle's negative battery cable. Double check to make sure everything is tight and properly positioned before starting the vehicle.

24. It will be necessary for all K&N® high flow intake systems to be checked periodically for realignment, clearance and tightening of all connections.
Failure to follow the above instructions or proper maintenance may void warranty.

ROAD TESTING:

1. Start the engine with the transmission in neutral or park, and the parking brake engaged. Listen for air leaks or odd noises. For air leaks secure hoses and connections. For odd noises, find cause and repair before proceeding. This kit will function identically to the factory system except for being louder and much more responsive.

2. Test drive the vehicle. Listen for odd noises or rattles and fix as necessary.

3. If road test is fine, you can now enjoy the added power and performance from your kit.

4. K&N Engineering, Inc., requires cleaning the intake system's air filter element every 50,000 miles. When used in dusty or off-road environments, our filters will require cleaning more often. We recommend that you visually inspect your filter once every 25,000 miles to determine if the screen is still visible. When the screen is no longer visible some place on the filter element, it is time to clean it. To clean, purchase our Synthetic Filter Cleaner, part number 99-0624 and follow the easy instructions.

NOT LEGAL FOR SALE OR USE ON ANY POLLUTION CONTROLLED MOTOR VEHICLE IN CALIFORNIA OR STATES ADOPTING CALIFORNIA EMISSION PROCEDURES.

See knfilters.com for CARB status on each part for a specific vehicle

• 1455 CITRUS ST., P.O. BOX 1329, RIVERSIDE, CA., U.S.A. 92502 • TECH SERVICE 800-858-3333 • FAX 951-826-4001
• e-mail: tech@knfilters.com® • WWW: http://www.knfilters.com®

#19731
03/30/23

trailfortress.com/k-n-performance-air-intake-system-30-3082