TRAIL FORTRESS

BUILT FOR THE TRAIL. CHECKED FOR YOUR TRUCK.

K&N 30-2620 Installation Instructions

Performance Air Intake System for Ford Bronco (2021-2024)

Part number: 30-2620

trailfortress.com/k-n-performance-air-intake-system-30-2620

Scan for fitment, price and install help

AIR INTAKE SYSTEMS

NOT LEGAL FOR SALE OR USE ON ANY POLLUTION CONTROLLED MOTOR VEHICLE IN CALIFORNIA OR STATES ADOPTING CALIFORNIA EMISSION PROCEDURES.

See knfilters.com for CARB status on each part for a specific vehicle

INSTALLATION INSTRUCTIONS

30-2620
FORD
2021-23 BRONCO
L4-2.3L

NOTE: This kit was not designed to fit vehicles with a body lift.

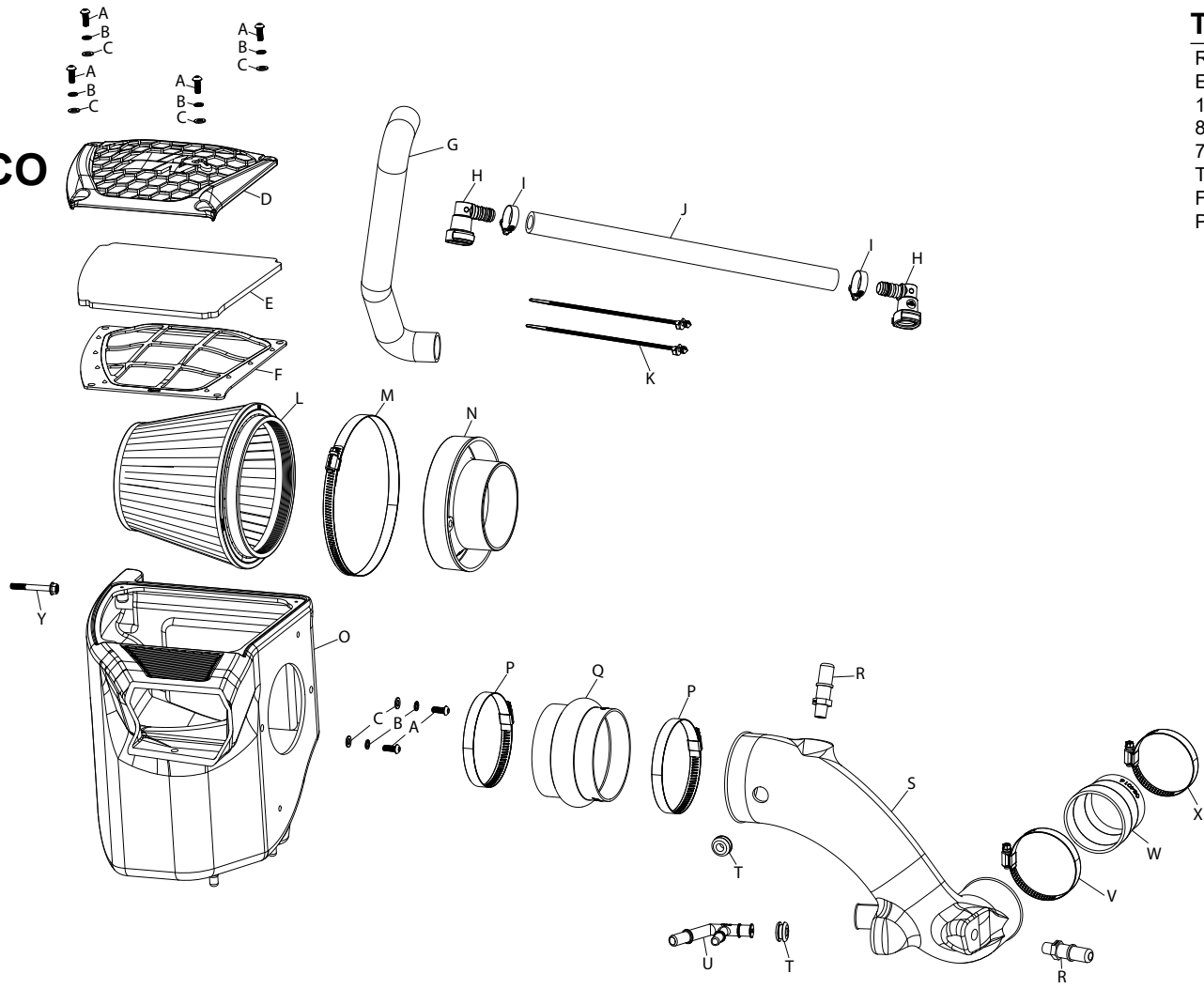

TOOLS NEEDED:

Ratchet
Extension
10mm Socket
8mm Socket
7mm Socket
T30 Torx
Flathead Screw Driver
Pliers

PARTS LIST:

	Description	Qty.	Part #		Description	Qty.	Part #		Description	Qty.	Part #
A	BOLT; M6 X 1 X 16MM, BTNHD	6	07730	I	HOSE CLAMP; #10 MINI	2	08411	Q	HOSE; HUMP 4"ID X 3"L	1	08418
B	WASHER; M6, SPLIT LOCK	6	1-3025	J	HOSE; 5/8"ID X 15"L	1	5-7015	R	VENT; 1/4NPT TO 5/8"OD MALE	2	082628
C	WASHER; 6MM FLAT	6	08269	K	ZIP TIE; 8" TREE PUSH MNT	2	1-127	S	INTAKE TUBE; (PZ)	1	087530
D	FRAME; PRECLEANER TOP	1	088202	L	AIR FILTER	1	RU-3102HBK	T	GROMMET; 9/16"ID - 1.125"OD	2	KITGRM02
E	INSERT; FOAM	1	971973	M	HOSE CLAMP; #104 BLK	1	08697KA	U	VENT; EJECTOR TEE, V, CCV	1	08548
F	FRAME; PRECLEANER BTM	1	088203	N	ADAPTOR; #454	1	27300	V	HOSE CLAMP; #48	1	08601
G	HOSE; 1.08"ID X 16"L	1	084129	O	AIRBOX; (PW)	1	087527	W	HOSE; 3" TO 2.5"ID X 3"L	1	08713
H	FITTING; Q.D. 16-14MM	2	KITFITTING33	P	HOSE CLAMP; #64 STAINLESS	2	08645	X	HOSE CLAMP; #36	1	08530
								Y	BOLT; M6-1 X 50, HEX/FLANGE	1	1-2070

If you need any assistance please call 1-800-858-3333 to speak with a representative in our Customer Service Center before returning the product.

NOTE: FAILURE TO FOLLOW INSTALLATION INSTRUCTIONS AND NOT USING THE PROVIDED HARDWARE MAY DAMAGE THE INTAKE TUBE, THROTTLE BODY AND ENGINE.

TO START:

1. Turn off the ignition and disconnect the negative battery cable.
NOTE: Disconnecting the negative battery cable erases pre-programmed electronic memories. Write down all memory settings before disconnecting the negative battery cable. Some radios will require an anti-theft code to be entered after the battery is reconnected. The anti-theft code is typically supplied with your owner's manual. In the event your vehicles anti-theft code cannot be recovered, contact an authorized dealership to obtain your vehicles anti-theft code.



2. Release the CCV quick connect fittings, unhook the CCV line from the radiator fan shroud and then remove CCV line from the vehicle.



3. Separate the coolant line from its mounting point on the factory air filter housing.



4. Loosen the hose clamp that secures the factory intake tube connection shown.



5. Remove the bolt that secures factory air filter housing to the inner fender.



6. Remove the push-pin that secures the fresh air intake duct.