TRAIL FORTRESS

BUILT FOR THE TRAIL. CHECKED FOR YOUR TRUCK.

K&N 30-2619 Installation Instructions

Cold Air Intake for Ford Bronco (2021-2025)

Part number: 30-2619

trailfortress.com/k-n-performance-air-intake-system-30-2619

Scan for fitment, price and install help

DRYFLOW AIR INTAKE SYSTEMS

INSTALLATION INSTRUCTIONS

Not legal for sale or use in California on any pollution controlled motor vehicle.

30-2619
FORD
2021-25 Bronco
V6-2.7L

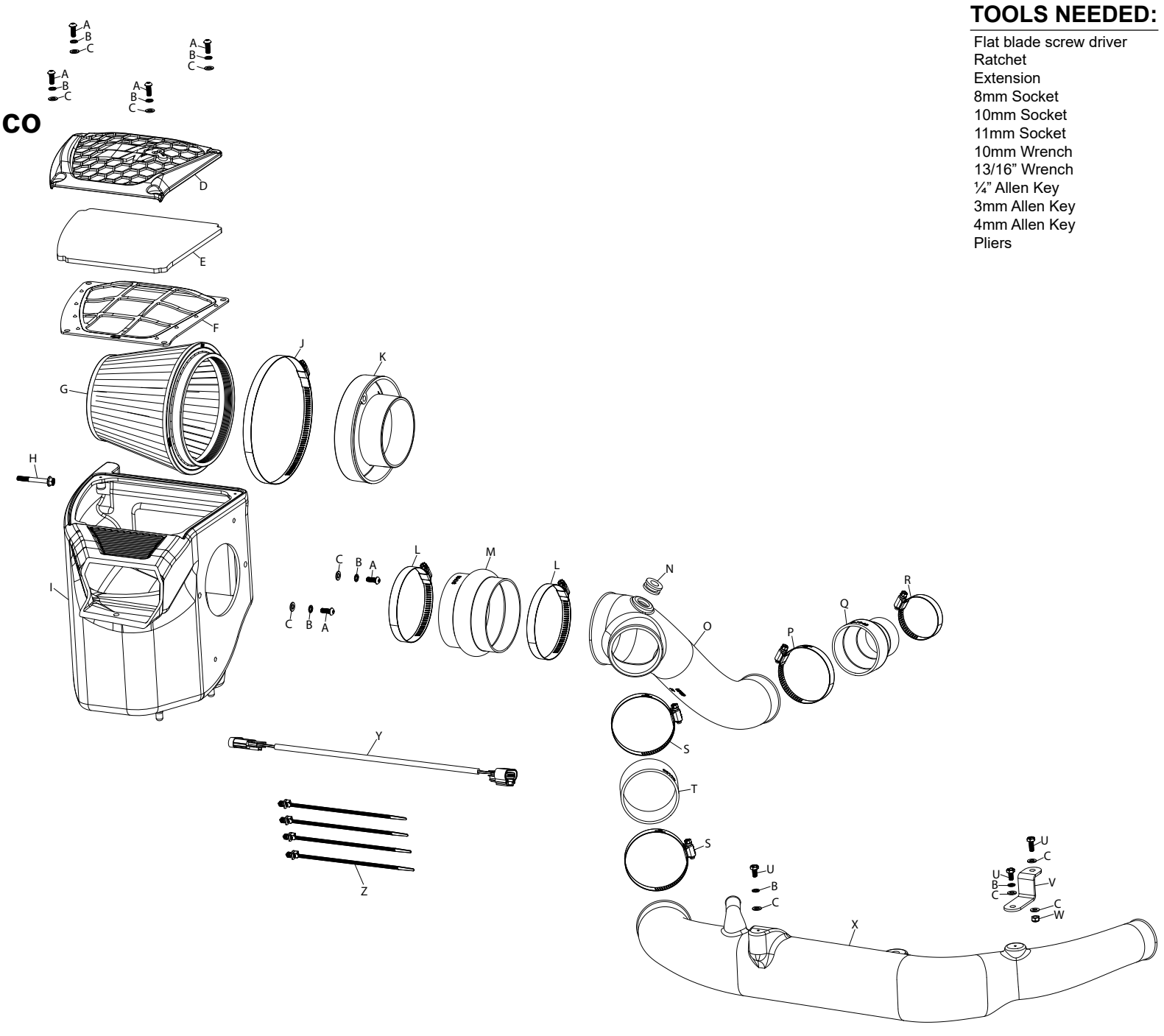

TOOLS NEEDED:

Flat blade screw driver
Ratchet
Extension
8mm Socket
10mm Socket
11mm Socket
10mm Wrench
13/16” Wrench
¼” Allen Key
3mm Allen Key
4mm Allen Key
Pliers

PARTS LIST:

	Description	Qty.	Part #		Description	Qty.	Part #		Description	Qty.	Part #
A	BOLT; M6 X 1 X 16MM, BTNHD	6	07730	J	HOSE CLAMP; #104 BLK ZINC	1	08697KA	S	HOSE CLAMP; #48	2	08601
B	WASHER; M6, SPLIT LOCK ZINC	8	1-3025	K	ADAPTOR; #454	1	27300	T	HOSE; 3”ID X 2.5”L	1	08192
C	WASHER; 6MM FLAT	10	08269	L	HOSE CLAMP; #64 STAINLESS	2	08645	U	BOLT; M6-1 X 16MM, HEX	3	07812
D	FRAME; PRECLEANER TOP	1	088202	M	HOSE; HUMP 4”ID X 3”L	1	08418	V	BRACKET; “Z”	1	064372
E	INSERT; FOAM	1	971973	N	GROMMET; 9/16”ID - 1.125”OD	1	KITGRMT02	W	NUT; 6MM NYLOCK, HEXHD	1	07512
F	FRAME; PRECLEANER BTM	1	088203	O	TUBE; PASSENGER SIDE, (PY)	1	087529	X	TUBE; DRIVER SIDE, (PX)	1	087528
G	AIR FILTER	1	RU-3102HBK	P	HOSE CLAMP; #44	1	08577	Y	EXTENSION HARNESS; 11”L	1	21783
H	BOLT; M6-1 X 50, HEX/FLANGE	1	1-2070	Q	HOSE; 2.75” TO 2”ID X 3”L	1	5-1045	Z	ZIP TIE; 8” TREE PUSH-MNT	4	1-127
I	AIRBOX; (PW)	1	087527	R	HOSE CLAMP; #32	1	08507				

If you need any assistance please call 1-800-858-3333 to speak with a representative in our Customer Service Center before returning the product.

NOTE: FAILURE TO FOLLOW INSTALLATION INSTRUCTIONS AND NOT USING THE PROVIDED HARDWARE MAY DAMAGE THE INTAKE TUBE, THROTTLE BODY AND ENGINE.

TO START:

1. Turn off the ignition and disconnect the negative battery cable.
NOTE: Disconnecting the negative battery cable erases pre-programmed electronic memories. Write down all memory settings before disconnecting the negative battery cable. Some radios will require an anti-theft code to be entered after the battery is reconnected. The anti-theft code is typically supplied with your owner’s manual. In the event your vehicles anti-theft code cannot be recovered, contact an authorized dealership to obtain your vehicles anti-theft code.



2. Disconnect the coolant hoses from the hot-side charge tube.



3. Release the BOV hose quick connect fitting and disconnect the BOV hose from the intake tube. Then disconnect BOV electrical connection and unhook the wiring harness from the mounting post.

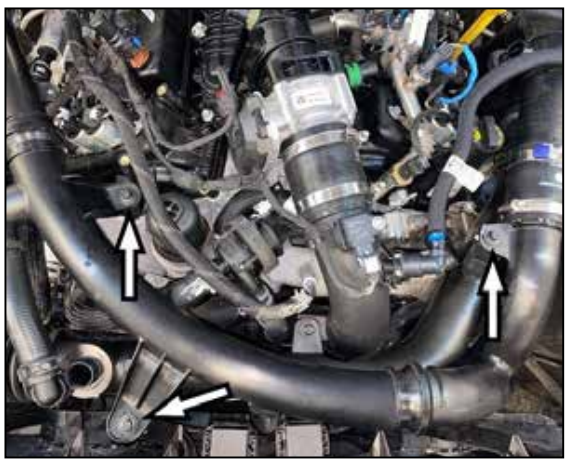

4. Remove the three mounting bolts securing the factory charge tube to the engine. Loosen the hose clamp that secures the right side of the charge tube and then release the two spring clamps and remove the factory charge tube from the vehicle.



5. Loosen the hose clamps the secure the driver's side intake tube.



6. Remove the bolt shown that secures the drivers side intake tube to the cold-side charge tube and then remove the drivers side intake tube from the vehicle.



7. Remove the push-pin that secures the fresh air inlet. Remove the air filter housing mounting bolt.



8. Unhook the wiring harness and coolant hoses from the air filter housing.



9. Loosen the hose clamp that secures the passenger side intake hose to the air filter housing and then remove the factory air filter housing from the vehicle.



10. Remove the bolt on the bottom side of the passenger side intake tube that secures the tube to the engine. Then Release the spring clamp that secures the intake tube to the turbo and remove the passenger side intake tube. **NOTE: The spring clamp is difficult to release with the tabs positioned towards the bottom of the turbo inlet.**



11. Reinstall the intake tube mounting bolt into the original location and tighten.



12. Install the provided step coupler onto the passenger side turbo inlet and secure with the provided hose clamp.

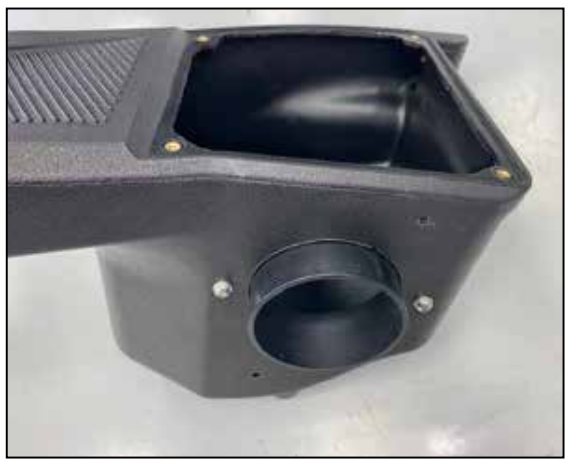

13. Install the provided filter adapter into the K&N air filter housing and secure with the provided hardware.



14. Set the K&N air filter housing into position and secure with the factory push-pin and the provided bolt.



15. Secure the lower coolant hose to the air filter housing.



16. Install the provided hump coupler onto the filter adapter and secure with the provided hose clamp. Then secure the upper coolant hose to the air filter housing as shown.



17. Remove the IAT sensor from the factory intake tube, remove the O-ring from the sensor and then install it into the K&N intake tube using the provided grommet. **NOTE: The IAT sensor is very fragile, use care while handling the sensor so as not to damage it.**



18. Install the K&N intake tube into the coupler at the turbo inlet and then into the coupler at the filter adapter and secure with the provided hose clamps.



19. Install the remaining straight coupler onto the K&N intake tube and secure with the provided hose clamp.



20. Install the driver side K&N intake tube into the factory turbo inlet coupler and then into the coupler on the passenger side K&N intake tube, adjust the tube for best fit and secure with the hose clamps and bolt.



21. Release the spring clamp the secures the quick connect fitting onto the BOV hose and then remove the fitting from the hose.



22. Reinstall the factory hot-side charge tube and secure the three connections. Reinstall the factory mounting bolt that secures the tube to the core support.



23. Install the provided “Z” bracket to the hot-side charge tube and K&N driver side intake tube and secure with the provided hardware.



24. Install the BOV hose onto the fitting on the K&N intake tube and secure with the provided spring clamp.



25. Reconnect the IAT sensor and BOV electrical connections and secure the BOV harness to the stud.



26. Resecure the coolant hoses to the hot-side charge tube.



27. Install the K&N air filter onto the filter adapter and secure with the provided hose clamp.



28. Assemble the filter top and then install the assembly on top of the air filter housing and secure with the provided hardware.



29. Reconnect the vehicle's negative battery cable. Double check to make sure everything is tight and properly positioned before starting the vehicle.

30. It will be necessary for all K&N® high flow intake systems to be checked periodically for realignment, clearance and tightening of all connections. Failure to follow the above instructions or proper maintenance may void warranty.

ROAD TESTING:

1. Start the engine with the transmission in neutral or park, and the parking brake engaged. Listen for air leaks or odd noises. For air leaks secure hoses and connections. For odd noises, find cause and repair before proceeding. This kit will function identically to the factory system except for being louder and much more responsive.

2. Test drive the vehicle. Listen for odd noises or rattles and fix as necessary.

3. If road test is fine, you can now enjoy the added power and performance from your kit.

4. K&N Engineering, Inc., requires cleaning the DryFlow intake system's air filter element every 50,000 miles. When used in dusty or off-road environments, our filters will require cleaning more often. We recommend that you visually inspect your filter once every 25,000 miles to determine if the screen is still visible. When the screen is no longer visible some place on the filter element, it is time to clean it. To clean, purchase our Synthetic Filter Cleaner, part number 99-0624 and follow the easy instructions.

trailfortress.com/k-n-performance-air-intake-system-30-2619