TRAIL FORTRESS

BUILT FOR THE TRAIL. CHECKED FOR YOUR TRUCK.

K&N 30-2605 Installation Instructions

Cold Air Intake for Ford Mustang GT (2018-2023)

Part number: 30-2605

trailfortress.com/k-n-performance-air-intake-system-30-2605

Scan for fitment, price and install help

DRYFLOW®
AIR INTAKE SYSTEMS

NOT LEGAL FOR SALE OR USE ON ANY POLLUTION CONTROLLED MOTOR VEHICLE IN CALIFORNIA OR STATES ADOPTING CALIFORNIA EMISSION PROCEDURES.

See knfilters.com for CARB status on each part for a specific vehicle

INSTALLATION INSTRUCTIONS

30-2605
FORD
2018-23 Mustang GT
V8-5.0L

NOTE: This kit was not designed to fit vehicles with a body lift.

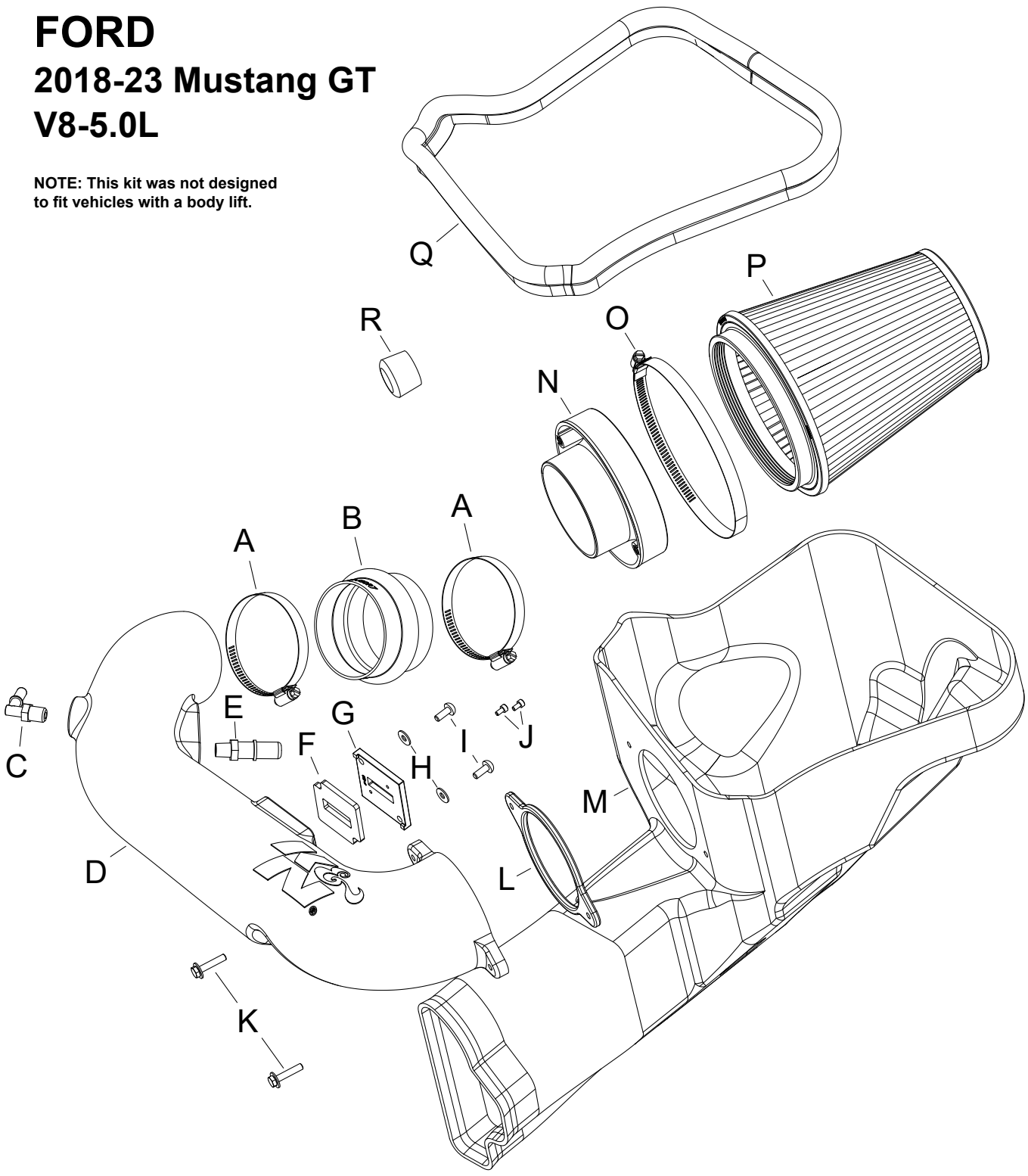

TOOLS NEEDED:

Ratchet
Extension
14mm Socket
10mm Socket
Flat Blade Screw Driver
10mm Wrench
Pliers

PARTS LIST:

	Description	Qty.	Part #
A	HOSE CLAMP; #56	2	08620
B	HOSE; HUMP 3.5”ID X 2.5”L	1	08699
C	VENT; 90°, 1/4NPT TO .375”	1	82632
D	INTAKE TUBE; (MZ)	1	087392
E	VENT; 1/4 NPT TO 5/8” OD	1	082628
F	GASKET; 3/16”PORON	1	09069
G	ADAPTOR; MAF SENSOR	1	21515-1
H	WASHER; 6MM FLAT	2	08269
I	BOLT; M6 X 1 X 16MM BTNHD	2	07730
J	BOLT; M4-.7 X 8MM, ALNHD	2	07733
K	BOLT; M6-1 X 30, HEX/FLANGE	2	1-1016
L	GASKET	1	09386
M	AIRBOX; (NA)	1	087393
N	ADAPTOR; #454	1	27300
O	HOSE CLAMP; #104 BLK	1	08697KA
P	AIR FILTER	1	RU-3101HBK
Q	EDGE TRIM; (50”L)	1	102462
R	CAPLUG; 15/16”ID, 3/4”L BLK	1	08246

If you need any assistance please call 1-800-858-3333 to speak with a representative in our Customer Service Center before returning the product.

NOTE: FAILURE TO FOLLOW INSTALLATION INSTRUCTIONS AND NOT USING THE PROVIDED HARDWARE MAY DAMAGE THE INTAKE TUBE, THROTTLE BODY AND ENGINE.

TO START:

1. Turn off the ignition and disconnect the negative battery cable.
NOTE: Disconnecting the negative battery cable erases pre-programmed electronic memories. Write down all memory settings before disconnecting the negative battery cable. Some radios will require an anti-theft code to be entered after the battery is reconnected. The anti-theft code is typically supplied with your owner’s manual. In the event your vehicles anti-theft code cannot be recovered, contact an authorized dealership to obtain your vehicles anti-theft code.



2. Remove the four nuts that secure the strut tower brace and then remove the strut tower brace from the vehicle.



3. Remove the fastener covers on the engine cover, remove the two nuts that secure the cover and then remove the cover from the engine.



4. Disconnect the mass air sensor electrical connection.



5. Disconnect the EVAP vent line, cut the clamp for the sound tube at the sound drum and disconnect the hose from the drum. Loosen the hose clamps that secure the intake tube to the throttle body and air filter housing then remove the intake tube from the vehicle.



6. Release the clips that secure the upper air filter housing and then remove the upper air filter housing from the vehicle.



7. Remove the bolt that secures the air filter housing to the inner fender and then remove the lower air filter housing from the vehicle.



8. Install the provided edge trim onto the K&N air filter housing. Install the K&N air filter housing into the vehicle and secure with the provided hardware. **NOTE: Some trimming of the edge trim will be necessary.**

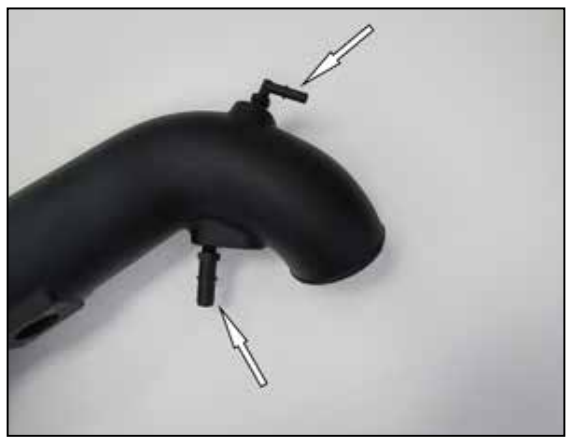

9. Install the provided fittings into the K&N intake tube as shown.



10. Install the provided gasket onto the K&N mass air sensor adapter.

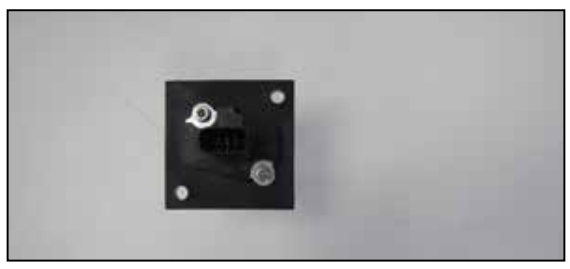

11. Remove the mass air sensor from the factory air filter housing and install it into the K&N adapter using the provided hardware.



12. Install the mass air sensor assembly into the K&N intake tube as shown and secure with the provided hardware.



13. Install the provided coupling hose (08699) onto the throttle body and secure with the provided hose clamp.



14. Install the filter adapter into the K&N air filter housing and then install the tube gasket onto the adapter. **NOTE: Be sure the threaded inserts in the adapter are aligned with the holes in the housing and gasket.**



15. Install the intake tube into the coupler at the throttle body and onto the filter adapter, secure the tube to the filter adapter with the provided hardware and to the coupling hose with the provided hose clamp.



16. Connect the EVAP and crank case vent lines to the fittings installed into the K&N intake tube.



17. Install the provided cap onto the sound drum as shown.



18. Install the K&N air filter onto the filter adapter and secure with the provided hose clamp.



19. Unhook the mass air sensor wiring harness from the inner fender and then route to the mass air sensor and reconnect.



20. Reinstall the engine cover and secure with the factory hardware, reinstall the nut covers. Reinstall the strut tower brace and secure with the factory nuts.



21. Reconnect the vehicle's negative battery cable. Double check to make sure everything is tight and properly positioned before starting the vehicle.

22. It will be necessary for all K&N® high flow intake systems to be checked periodically for realignment, clearance and tightening of all connections.
Failure to follow the above instructions or proper maintenance may void warranty.

ROAD TESTING:

1. Start the engine with the transmission in neutral or park, and the parking brake engaged. Listen for air leaks or odd noises. For air leaks secure hoses and connections. For odd noises, find cause and repair before proceeding. This kit will function identically to the factory system except for being louder and much more responsive.

2. Test drive the vehicle. Listen for odd noises or rattles and fix as necessary.

3. If road test is fine, you can now enjoy the added power and performance from your kit.

4. K&N Engineering, Inc., requires cleaning the intake system's air filter element every 50,000 miles. When used in dusty or off-road environments, our filters will require cleaning more often. We recommend that you visually inspect your filter once every 25,000 miles to determine if the screen is still visible. When the screen is no longer visible some place on the filter element, it is time to clean it. To clean, purchase our Synthetic Filter Cleaner, part number 99-0624 and follow the easy instructions.

NOT LEGAL FOR SALE OR USE ON ANY POLLUTION CONTROLLED MOTOR VEHICLE IN CALIFORNIA OR STATES ADOPTING CALIFORNIA EMISSION PROCEDURES.

See knfilters.com for CARB status on each part for a specific vehicle

• 1455 CITRUS ST., P.O. BOX 1329, RIVERSIDE, CA., U.S.A. 92502 • TECH SERVICE 800-858-3333 • FAX 951-826-4001
• e-mail: tech@knfilters.com® • WWW: http://www.knfilters.com®

#19725
03/30/23

trailfortress.com/k-n-performance-air-intake-system-30-2605