TRAIL FORTRESS

BUILT FOR THE TRAIL. CHECKED FOR YOUR TRUCK.

K&N 30-1576 Installation Instructions

Cold Air Intake for Jeep Wrangler & Gladiator (2018-2026)

Part number: 30-1576

trailfortress.com/k-n-performance-air-intake-system-30-1576

Scan for fitment, price and install help

DRYFLOW
AIR INTAKE SYSTEMS

INSTALLATION INSTRUCTIONS

Not legal for sale or use in California on any pollution controlled motor vehicle.

30-1576
JEEP
2018-25 Wrangler JL
2020-25 Gladiator
V6-3.6L

NOTE: This kit was not designed to fit vehicles with a body lift.

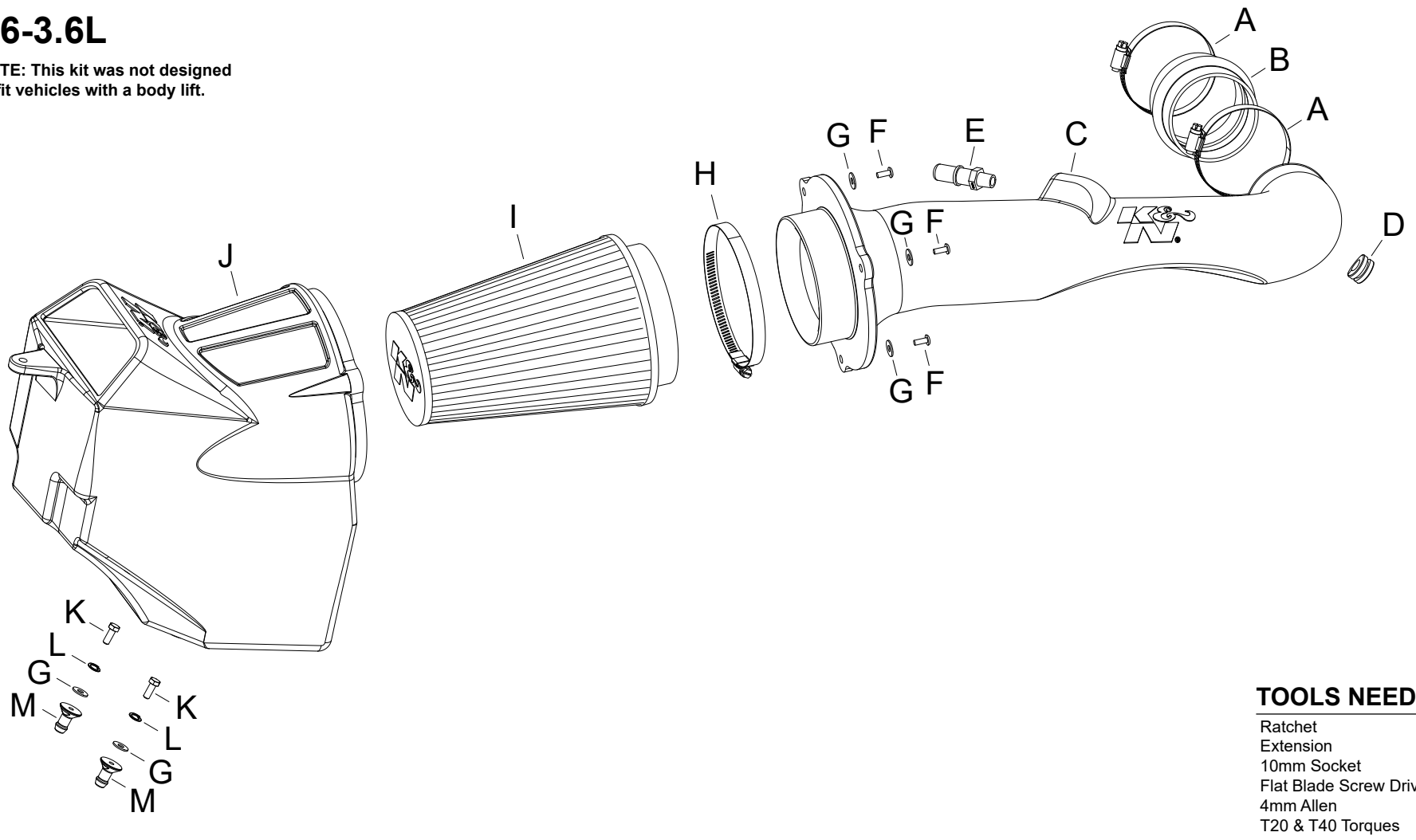

TOOLS NEEDED:

Ratchet
Extension
10mm Socket
Flat Blade Screw Driver
4mm Allen
T20 & T40 Torques

PARTS LIST:

	Description	Qty.	Part #		Description	Qty.	Part #		Description	Qty.	Part #
A	HOSE CLAMP; #52, BLK ZINC	2	08610KA	F	BOLT; M6 X 1 X 16MM, BTNHD	3	07730	K	BOLT; M6-1 X 16MM, HEX	2	07812
B	HOSE; HUMP 3.25”ID X 2-5/8”L	1	08171	G	WASHER; 1/4”ID X 5/8”OD - SAE	5	08275	L	WASHER; M6, SPLIT LOCK	2	1-3025
C	INTAKE TUBE; (MS)	1	087384	H	HOSE CLAMP; #80 BLK ZINC	1	08694KA	M	MOUNT; PLASTIC AIRBOX	2	8-186-1
D	GROMMET; 1”OD, 1/2”ID, 1/2”THK	1	08064	I	AIR FILTER	1	RU-3107HBK				
E	VENT; 1/4 NPT TO 5/8”OD Q.C.	1	082628	J	AIRBOX; (MT)	1	087385-1				

If you need any assistance please call 1-800-858-3333 to speak with a representative in our Customer Service Center before returning the product.

NOTE: FAILURE TO FOLLOW INSTALLATION INSTRUCTIONS AND NOT USING THE PROVIDED HARDWARE MAY DAMAGE THE INTAKE TUBE, THROTTLE BODY AND ENGINE.

TO START:

1. Turn off the ignition and disconnect the negative battery cable.
NOTE: Disconnecting the negative battery cable erases pre-programmed electronic memories. Write down all memory settings before disconnecting the negative battery cable. Some radios will require an anti-theft code to be entered after the battery is reconnected. The anti-theft code is typically supplied with your owner’s manual. In the event your vehicles anti-theft code cannot be recovered, contact an authorized dealership to obtain your vehicles anti-theft code.



2. Disconnect the inlet air temp electrical connector.



3. Disconnect the crank case vent line.



4. Remove the bolts that secure the factory tube to the fan shroud, then loosen hose clamp at throttle body.

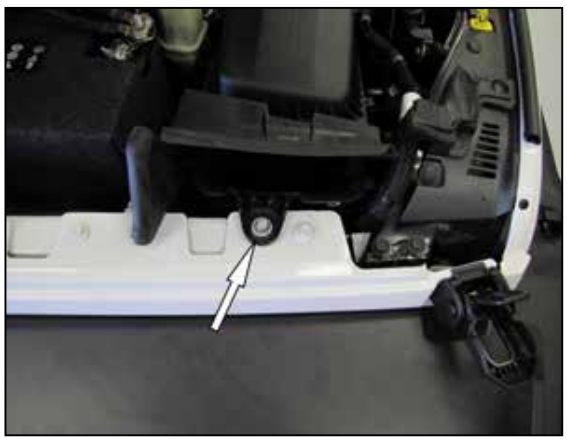

5. Remove the bolt that secures the factory air box to the filter and remove assembly.



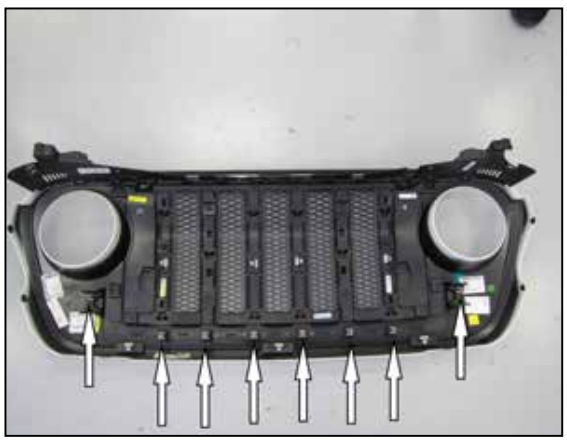

6. Remove the 6 clips at the top of the grill that secure grill to core support. Before removing grill note the location of the 8 clips that hold the lower part of the grill to the core support. Start at either side of the grill. Grasp the bottom part of the grill pulling firmly straight back dislodging the clips one at a time. Work your way across the grill until all clips have been dislodge and remove the grill.



7. Remove the two bolts that secure the core support brace to the core support and remove brace. **NOTE: the brace will be reinstalled in a later step.**





8. Remove the two bolts that secure the inlet scoop to the core support and remove inlet scoop.



9. Reinstall core support brace onto the core support.



10. Reinstall the grill reengaging the lower clips one at a time then reinstall the six clips that hold the grill to the top of the core support.



11. Install two airbox mounts onto the K&N airbox with provided hardware.



12. Install ¼ NPT quick connect fitting onto the tube.



13. Remove the inlet air temp sensor from the factory inlet tube. Then remove the “O” ring from the sensor. Install the provided grommet onto the K&N intake tube. Then install the inlet air temp sensor into the grommet.



14. Install the K&N air filter onto the K&N intake tube.



15. Install the K&N intake tube assembly onto the K&N airbox with provided hardware. **NOTE: the orientation of the K&N intake tube.**



16. Install provided hose onto the throttle body (08171) secure with provided clamp.



17. Install the K&N intake assembly into the hose at throttle body first, then engage the K&N airbox mounts into the factory airbox mounting location. Secure K&N intake assembly with provided clamp.



18. Reconnect the crank case vent line onto the quick connect fitting and reconnect the inlet temp sensor electrical connector onto the temp sensor.



19. Reconnect the vehicle's negative battery cable. Double check to make sure everything is tight and properly positioned before starting the vehicle.

20. It will be necessary for all K&N® high flow intake systems to be checked periodically for realignment, clearance and tightening of all connections. Failure to follow the above instructions or proper maintenance may void warranty.

ROAD TESTING:

1. Start the engine with the transmission in neutral or park, and the parking brake engaged. Listen for air leaks or odd noises. For air leaks secure hoses and connections. For odd noises, find cause and repair before proceeding. This kit will function identically to the factory system except for being louder and much more responsive.

2. Test drive the vehicle. Listen for odd noises or rattles and fix as necessary.

3. If road test is fine, you can now enjoy the added power and performance from your kit.

4. K&N Engineering, Inc., requires cleaning the intake system's air filter element every 50,000 miles. When used in dusty or off-road environments, our filters will require cleaning more often. We recommend that you visually inspect your filter once every 25,000 miles to determine if the screen is still visible. When the screen is no longer visible some place on the filter element, it is time to clean it. To clean, purchase our Synthetic Filter Cleaner, part number 99-0624 and follow the easy instructions.

trailfortress.com/k-n-performance-air-intake-system-30-1576